UNITED NATIONS
INDUSTRIAL DEVELOPMENT ORGANIZATION

Technical Guidelines for the Development of Small Hydropower Plants

DESIGN

Part 5: Engineering Layout and Hydraulic Structure

SHP/TG 002-5: 2019

DISCLAIMER

Technical Guidelines for the
Development of Small Hydropower Plants
DESIGN

Part 5: Engineering Layout and Hydraulic Structure

SHP/TG 002-5: 2019

ACKNOWLEDGEMENTS

The technical guidelines (TGs) are the result of a collaborative effort between the United Nations Industrial Development Organization (UNIDO) and the International Network on Small Hydro Power (INSHP). About 80 international experts and 40 international agencies were involved in the document's preparation and peer review, and they provided concrete comments and suggestions to make the TGs professional and applicable.

UNIDO and the INSHP highly appreciate the contributions provided during the development of these guidelines and in particular those delivered by the following international organizations:

- The Common Market for Eastern and Southern Africa(COMESA)

- The Global Network of Regional Sustainable Energy Centres (GN-SEC), particularly the ECOWAS Centre for Renewable Energy and Energy Efficiency (ECREEE), the East African Centre for Renewable Energy and Energy Efficiency (EACREEE), the Pacific Centre for Renewable Energy and Energy Efficiency (PCREEE) and the Caribbean Centre for Renewable Energy and Energy Efficiency (CCREEE).

The Chinese government has facilitated the finalization of these guidelines and was of great importance to its completion.

The development of these guidelines benefited greatly from the valuable inputs, review and constructive comments as well as contributions received from Mr. Adnan Ahmed Shawky Atwa, Mr. Adoyi John Ochigbo, Mr. Arun Kumar, Mr. Atul Sarthak, Mr. Bassey Edet Nkposong, Mr. Bernardo Calzadilla-Sarmiento, Ms. Chang Fangyuan, Mr. Chen Changju, Ms. Chen Hongying , Mr. Chen Xiaodong, Ms. Chen Yan, Ms. Chen Yueqing, Ms. Cheng Xialei, Ms. Chileshe Kapaya Matantilo, Ms. Chileshe Mpundu Kapwepwe, Mr. Deogratias Kamweya, Mr. Dolwin Khan, Mr. Dong Guofeng, Mr. Ejaz Hussain Butt, Ms. Eva Kremere, Ms. Fang Lin, Mr. Fu Liangliang, Mr. Garaio Donald Gafiye, Mr. Guei Guillaume Fulbert Kouhie, Mr. Guo Chenguang, Mr. Guo Hongyou, Mr. Harold John Annegam, Ms. Hou Ling, Mr. Hu Jianwei, Ms. Hu Xiaobo, Mr. Hu Yunchu, Mr. Huang Haiyang, Mr. Huang Zhengmin, Ms. Januka Gyawali, Mr. Jiang Songkun, Mr. K. M. Dharesan Unnithan, Mr. Kipyego Cheluget, Mr. Kolade Esan, Mr. Lamyser CastellanosRigoberto, Mr. Li Zhiwu, Ms. Li Hui, Mr. Li Xiaoyong, Ms. Li Jingjing, Ms. Li Sa, Mr. Li Zhenggui, Ms. Liang Hong, Mr. Liang Yong, Mr.Lin Xuxin, Mr. Liu Deyou, Mr. Liu Heng, Mr. Louis Philippe Jacques Tavernier, Ms. Lu Xiaoyan, Mr. Lv Jianping, Mr. Manuel Mattiat,Mr. Martin Lugmayr, Mr. Mohamedain Seif Elnasr, Mr. Mundia Simainga, Mr. Mukayi Musarurwa, Mr. Olumide Taiwo Alade, Mr.Ou Chuanqi, Ms. Pan Meiting, Mr. Pan Weiping, Mr. Ralf Steffen Kaeser, Mr. Rudolf Hüpfl, Mr. Rui Jun, Mr. Rao Dayi, Mr. SandeepKher, Mr. Sergio Armando Trelles Jasso, Mr. Sindiso Ngwenga, Mr. Sidney Kilmete, Ms. Sitraka Zarasoa Rakotomahefa, Mr. ShangZhihong, Mr. Shen Cunke, Mr. Shi Rongqing, Ms. Sanja Komadina, Mr. Tareq Emtairah, Mr. Tokihiko Fujimoto, Mr. TovoniainaRamanantsoa Andriampaniry, Mr. Tan Xiangqing, Mr. Tong Leyi, Mr. Wang Xinliang, Mr. Wang Fuyun, Mr. Wei Jianghui, Mr. WuCong, Ms. Xie Lihua, Mr. Xiong Jie, Ms. Xu Jie, Ms. Xu Xiaoyan, Mr. Xu Wei, Mr. Yohane Mukabe, Mr. Yan Wenjiao, Mr. Yang Weijun,Ms. Yan Li, Mr. Yao Shenghong, Mr. Zeng Jingnian, Mr. Zhao Guojun, Mr. Zhang Min, Mr. Zhang Liansheng, Mr. Zhang Zhenzhong,Mr. Zhang Xiaowen, Ms. Zhang Yingnan, Mr. Zheng Liang, Mr. Zheng Xiongwei, Mr. Zheng Yu, Mr. Zhou Shuhua, Ms. Zhu Mingjuan.

Further recommendations and suggestions for application for the update would be highly welcome.

Table of Contents

Foreword

The United Nations Industrial Development Organization (UNIDO) is a specialized agency under the United Nations system to promote globally inclusive and sustainable industrial development (ISID). The relevance of ISID as an integrated approach to all three pillars of sustainable development is recognized by the 2030 Agenda for Sustainable Development and the related Sustainable Development Goals (SDGs), which will frame United Nations and country efforts towards sustainable development in the next fifteen years. UNIDO's mandate for ISID covers the need to support the creation of sustainable energy systems as energy is essential to economic and social development and to improving quality of life. International concern and debate over energy have grown increasingly over the past two decades, with the issues of poverty alleviation, environmental risks and climate change now taking centre stage.

INSHP (International Network on Small Hydro Power) is an international coordinating and promoting organization for the global development of small hydropower (SHP), which is established on the basis of voluntary participation of regional, subregional and national focal points, relevant institutions, utilities and companies, and has social benefit as its major objective. INSHP aims at the promotion of global SHP development through triangle technical and economic cooperation among developing countries, developed countries and international organizations, in order to supply rural areas in developing countries with environmentally sound, affordable and adequate energy, which will lead to the increase of employment opportunities, improvement of ecological environments, poverty alleviation, improvement of local living and cultural standards and economic development.

UNIDO and INSHP have been cooperating on the World Small Hydropower Development Report since year 2010. From the reports, SHP demand and development worldwide were not matched. One of the development barriers in most countries is lack of technologies. UNIDO, in cooperation with INSHP, through global expert cooperation, and based on successful development experiences, decided to develop the SHP TGs to meet demand from Member States.

These TGs were drafted in accordance with the editorial rules of the ISO/IEC Directives, Part 2 (see www.iso.org/directives).

Attention is drawn to the possibility that some of the elements of these TGs may be subject to patent rights. UNIDO and INSHP shall not be held responsible for identifying any such patent rights.

Introduction

Small Hydropower (SHP) is increasingly recognized as an important renewable energy solution to the challenge of electrifying remote rural areas. However, while most countries in Europe, North and South America, and China have high degrees of installed capacity, the potential of SHP in many developing countries remains untapped and is hindered by a number of factors including the lack of globally agreed good practices or standards for SHP development.

These Technical Guidelines for the Development of Small Hydropower Plants (TGs) will address the current limitations of the regulations applied to technical guidelines for SHP Plants by applying the expertise and best practices that exist across the globe. It is intended for countries to utilize these agreed upon Guidelines to support their current policy, technology and ecosystems. Countries that have limited institutional and technical capacities, will be able to enhance their knowledge base in developing SHP plants, thereby attracting more investment in SHP projects, encouraging favourable policies and subsequently assisting in economic development at a national level. These TGs will be valuable for all countries, but especially allow for the sharing of experience and best practices between countries that have limited technical know-how.

The TGs can be used as the principles and basis for the planning, design, construction and management of SHP plants up to 30MW.

- The Terms and Definitions in the TGs specify the professional technical terms and definitions commonly used for SHP Plants.
- The Design Guidelines provide guidelines for basic requirements, methodology and procedure in terms of site selection, hydrology, geology, project layout, configurations, energy calculations, hydraulics, electromechanical equipment selection, construction, project cost estimates, economic appraisal, financing, social and environmental assessments—with the ultimate goal of achieving the best design solutions.
- The Units Guidelines specify the technical requirements on SHP turbines, generators, hydro turbine governing systems, excitation systems, main valves as well as monitoring, control, protection and DC power supply systems.
- The Construction Guidelines can be used as the guiding technical documents for the construction of SHP projects.
- The Management Guidelines provide technical guidance for the management, operation and maintenance, technical renovation and project acceptance of SHP projects.

Technical Guidelines for the
Development of Small Hydropower Plants
CONSTRUCTION

Part 5: Engineering Layout and Hydraulic Structure

1 Scope

This part of the Design Guidelines clarifies the flood control design standards for the hydraulic structures of an small hydropower (SHP) station, defines specific requirements for the general engineering layout as well as the type selection and the design of the water retaining structure, water releasing structure,diversion structure, powerhouse andswitchyard, and specifies the technical requirements for engineeringsafety monitoring, and concrete and steel performance.

The applicable height of a reservoir dam in this document is: 30 m for a rolled earth-rock dam, 50 m for a concrete faced rockfill dam and 70 m for a concrete(masonry) gravity dam. When the above-mentioned height is exceeded,the building design standard and safety margin shall be determined by referring to other technical standards.

2 Normative references

The following documents are referred to in the text in such a way that some or all of their content constitutes requirements of this document. For dated references, only the edition cited applies. For undated references, the latest edition of the referenced document (including any amendments) applies.

SHP/TG 001, *Technical guidelines for the development of small hydropower plants —Terms and definitions.*

3 Terms and definitions

For the purposes of this document, the terms and definitions given in SHP/TG 001 and the following apply.

4 Flood control standard

4.1 General provisions

4.1.1 The flood control standard for a hydropower project shall be determined through comprehensive analysis and demonstration in accordance with the requirements of economic, social, political and environmental factors for the flood control safety, by coordinating the relationships between the part and the whole, between the short term and the long term, between the upstream and the downstream, between the left bank and the right bank, and between the mainstream and its tributaries.

4.1.2 The flood control standard shall be expressed with the recurrence interval for the flood to be controlled. The flood control standard may contain two-stage flood standards, namely design flood and verified flood, according to the requirements of different protected objects.

4.1.3 The flood control standard shall be determined in accordance with the relevant requirements of the laws and regulations of the country.

4.2 Permanent hydraulic structure

The flood control standards [recurrence interval (year)] for hydraulic structures of hydropower stations of different of reservoir capacity and installed capacity should be determined according to Table 1.

Table 1 - Flood control standards [recurrence interval (year)] for hydraulic structures

Hydraulic structure	Structure of ≤10MW hydropower station or reservoir with storage capacity of $1\times10^6 m^3$		Structure of 10MW to 30MW hydropower station or reservoir with storage capacity of (1-10) $\times10^6 m^3$	
	Design standard	Check standard	Design standard	Check standard
Concrete (stone masonry) dam	20~30	100~200	30~50	200~500
Rolled earth dam/ rock-fill dam	20~30	200~300	30~50	300~1000
Sluice (flap gate)	10	20~50	10~20	50~100
Powerhouse (switchyard)	20~30	50	30~50	100
Water conveyance structure	10~20	30~50	10	20~30
Energy dissipation and anti-scour structure	10	/	20	/
Channel structure	10	20~30	10~20	30~50

4.3 Temporary hydraulic structure

The flood control standards for temporary water retaining and releasing structures used during the construction period of a hydropower station shall be determined according to the structure of the buildings. When earth-rock structure is used, the design may be performed on the basis of 5 to 10 years return flood; when a concrete or stone masonry structure is used, the design may be performed on the basis of 3 to 5 years return flood.

4.4 Freeboard of structure

4.4.1 The crest of dam(or wave wall)structure of hydropower station shall be determined according to the static water level under engineering design flood and verified flood conditions, plus corresponding wave run-up, wind banked-up height and marginal height.

4.4.2 The crest of the retaining structure shall not be lower than the normal reservoir water level and the verified flood level.

4.4.3 The marginal height of hydraulic structures may be determined according to the structure type and with reference to Table 2.

Table 2 - Hydraulic structure marginal height

Unit: m

Hydraulic structure	Design standard	Check standard
Concrete (stone masonry) dam	0.4	0.3
Rolled earth dam/ rockfill dam	0.5	0.3
Sluice (when retaining water)	0.3 (normal water filling)	0.2 (maximum water retaining)
Sluice (when releasing water)	0.5	0.4
Spillway	0.4 (when retaining water)	0.3 (when releasing water)

5 General engineering layout

5.1 General provisions

5.1.1 Hydropower development models may be divided into basic types such as dam-toe type, riverbed type, diversion type and hybrid hydropower station.

5.1.2 The general engineering layout of a hydropower station mainly includes the selection of the dam site, diversion route and plant site (switchyard), as well as the dam type selection and engineering layout of a multi-purpose project.

5.1.3 The layout of hydropower project may be performed under the following principles:

a) The requirements for flood control, power generation, shipping, fishery, forestry, transportation, and the eco-environment shall be comprehensively considered. The requirement of structures for the layout shall be met so as to ensure them to work normally under any working conditions.

b) The structures of project shall be compactly laid out to reduce investment and for operational and management convenience under the premise of meeting the functional requirements.

c) One structure shall be used for multiple purposes, or the temporary structure and permanent structure shall be combined in the layout to give full play to comprehensive benefits.

d) The layout of project shall be considered with the purpose of reducing the total construction cost and annual operating costs of the project under the premise of meeting the structure strength and stability requirements.

e) The construction diversion method, the construction method for main structures and the construction schedule shall be selected for the convenience of construction, a short construction period and low construction cost.

f) The appearance of the project shall be coordinated with the ambient environment, and integrated into the natural environment according to the local conditions so as to create a multi-functional and pleasant environment.

5.1.4 When the water retaining structure (except for an arch dam) is laid out, the dam axis should be short and straight. The relatively longer straight axis or broken-line or curve axis may also be adopted according to the actual situation.

5.1.5 The layout of the water releasing structure depends on the dam type for the water retaining structure

and the geological and topographical conditions near the dam site.

5.1.6 The general requirements for layout of water intake:

a) In any period, it is necessary to supply water without interruption according to the diversion requirement;

b) On a silt-rich river, it is necessary to implement effective sediment control measures to prevent the sediment from entering the diversion channel;

c) With regard to head works for comprehensive utilization, it is necessary to ensure that the structures could work normally and will not interfere with each other;

d) It is necessary to take measures to prevent the floatage, such as floating ice, from entering the diversion channel;

e) It is necessary to renovate the river channel near the intake as necessary to bring the mainstream closer to the water intake to ensure the required water intake volume;

f) The layout of the intake structure shall be convenient for management and easy for modern managementfacilities.

5.1.7 The structures of the powerhouse shall be laid out so that:

- The water channels to upstream and downstream regions are as short as possible.
- The water flow should be smooth, the head loss should be minimal and the water outlet shall not be deposited or impacted by the ice blocks.
- The tailrace shall be sufficiently deep and wide, the plane curvature shall not be extensive, the depth shall vary gradually and the tailrace shall be smoothly connected to the natural river flow or channel.
- The water flow or energy dissipation facilities at the outlets of the release structure shall be laid out to avoid raising the tailwater level of the hydropower station as much as possible.

5.1.8 The following data shall be collected for design of the hydraulic structures：

a) Topographic data: including regional topographic map on small scale (1:10 000 to 1:50 000) and the surveyed topographic map of dam site on large scale (1:200 to 1:1 000).

b) Geological data: the geological survey results for the dam area, including the distribution and depth of the overburden, lithology, structure and burial depth of the rocks, groundwater level and burial depth of the relative confining bed, dam foundation, rock weathering belt and unloading belt of the dam abutment as well as the distribution and characteristics of the faults, particularly the faults along the river and with low-angle dip.

c) Hydrological and meteorological data: the hydrological data mainly refers to all kinds of hydrological characteristics of the dam area such as runoff, flood, corresponding water level and sediment concentration. The meteorological data mainly refers to the meteorological factors for the region where the project is located, including sunlight, rainfall, snowfall, wind power, air temperature and water temperature.

d) The results of hydraulic energy calculations include the water level of each characteristic of the reservoir (normal reservoir level, designed flood level, checked flood level, dead water level for power generation), characteristic parameters of flood discharge structures (outlet size, control elevation, dispatching mode).

e) Data on construction materials: including the distribution of construction materials on the dam site

and in the nearby area, including the quality, reserves and physical and mechanical properties of the natural construction materials (rock blocks and sandy gravel), as well as the characteristic parameter, transportation distance and price of the artificial materials (cement and rebar)

f) Shall acknowledge the property and geologic structure of the rock stratum, the hydrogeology, the stability of the side slope, the karst, landslide mass and the harmful gas along the route of the diversion system, as well as the ground stress and the rockburst situation in the region with high ground stress.

g) For the overloaded river, the information about the content, particles, hardness, unit weight and motion law of the bed load and the suspended load in the river channel shall be collected. For the water intake that takes water from the reservoir, the deposition morphology and elevation of the sediment in the reservoir area also shall be acknowledged.

h) For the river channel with heavy trash, the source, variety, quantity and drifting pattern of the trash shall be collected.

i) For the river in a frost region, the icing period, floating ice features and floating ice quantity; the size of the ice blocks and the thickness of the ice layer; the operating data for the hydropower station intake in winter under similar conditions shall be collected.

5.2 Dam site selection

5.2.1 The possible alternative dam sites shall be envisaged in accordance with the geological and topographical conditions of river reach as well as the development and utilization requirements; the representative dam axis, dam type and project layout of every dam site shall be determined through study and comparison, and the dam site shall be selected and determined through comprehensive technical and economic comparison.

5.2.2 If the river valley is narrow and the geological conditions are good, then it is suitable for an arch dam; if the river valley is wide and the geological conditions are relatively good, a gravity dam may be selected; if the river valley is wide, the riverbed overburden is deep and thick or the geological conditions are relatively poor, and the local material reserves such as earth, stone and gravel are abundant, it is suitable for an earth and rockfill dam.

5.2.3 With regard to a gravity dam site, the rocks shall have sufficient strength, integrity and homogeneity; with regard to a concrete arch dam site, the requirements for rock mass strength and integrity are greater than those for a gravity dam, meanwhile the dam abutment shall be stable. With regard to earth and rockfill dam sites, it is necessary to ascertain the thickness of dam foundation overburden, and verify whether liquefiable soil layer exists in the dam foundation.

5.2.4 The dam site shall be convenient for construction diversion; the terrain near the dam site shall be relatively wide and open for convenience when laying out the construction site; meanwhile, attention shall be paid to the difference between the overall construction layout and the operation management conditions for convenience of project operation and management. The dam site shall also be selected with consideration given to the external traffic conditions.

5.2.5 The dam site shall be selected with consideration given to the variety, reserve, quality, quantity, distribution and transportation distance for different construction materials.

5.2.6 It is preferable to select the dam site with the least submergence, land acquisition and resettlement of residents; when comparing and selecting the dam site, it is also necessary to consider the influence on the environment and try to keep away from sensitive objects; it is necessary to select the dam site which is the most technologically reliable and economical.

5.2.7 When a dam site is selected, it should be considered whether large-scale collapses and landslides will occur in the reservoir area after reservoir impoundment. In hilly and plain areas, excessive immersion should be avoided.

5.2.8 When the peak ground acceleration in the dam site area is greater than or equal to 0.1g ($g=9.81m/s^2$), anti-seismic construction measures should be undertaken for the hydraulic structures.

5.3 Sluice site selection

5.3.1 The barrage dam shall be selected through technical and economic comparison according to the functions, characteristics and application requirements of the sluice, with comprehensive consideration given to the terrain, geology, water flow, sediment, frozen earth, ice conditions, construction, management and ambient environment.

5.3.2 The sluice site should be selected on a natural foundation with open terrain and stable bank slopes, and with consideration given to the leakage, stability and deformation conditions of the sluice foundation and sluice shoulders on both banks.

5.3.3 The site of flap-type sluice dam or flood discharge sluice and scouring sluice should be selected in the river reach with a straight river channel and relatively stable river regime. The axis of sluice should be orthogonal to the centreline of the river channel; the length of straight sections of upstream and downstream river channels should not be less than 5 times the water surface width at the sluice inlet. The flood discharge sluice located in the curved reach should be laid out in the thalweg portion of the river

5.3.4 The site for the inlet sluice should be selected within the straight reach with basically stable banks or at the end point of a concave bank curved slightly to the downstream region.

5.3.5 The sluice site shall be selected with consideration given to the material sources, external traffic, construction diversion, site layout, foundation pit drainage and construction water and electricity supply.

5.3.6 The intersection between the centreline of inlet sluice and the centreline of the river course (channel) should not exceed 30°, and its upstream bypass channel (channel) should not be overly long.

5.3.7 With regard to the sluice on an overloaded river, scouring sluice (desilting sluice) or flood-discharging and scouring sluice shall be arranged in positions corresponding to the water intake of inlet sluice or the water intake of other intake structure, and the sediment deposition problem which may occur at the water intake for the inlet sluice or the water intake for other intake structures shall be properly resolved.

5.4 Site selection for hydropower station

5.4.1 The powerhouse of diversion-type hydropower stations should be far away from the dam, usually located below the high steep slope. The surge chamber or forebay should be arranged on the high steep slope; the massif between the powerhouse and surge chamber or forebay shall be stable, with slight water permeability.

5.4.2 With regard to the water intake for a powerhouse in a river channel, it is necessary to avoid the silting and abrasion of sediment, the plugging from floating trash and obstruction from ice.

- When the powerhouse is adjacent to the overflow dam, a dividing wall shall be arranged between them that is long enough to prevent the flood fluctuation influencing the powerhouse and its tailwater;
- The powerhouse, power transformation equipment and switchyard should be kept a certain

distance away from the jet stream from flood discharge in order to prevent the atomized flow influencing the safe operation.

5.5 Dam type selection

5.5.1 If the traffic is inconvenient or the steel, cement and concrete aggregate are insufficient in the dam site region, but there are abundant earth and stone materials and the terrain is suitable for building river bank spillway, then an earth and rockfill dam shall be selected and built with precedence using local materials.

5.5.2 If the geological conditions are relatively good, and a lot of gravel aggregate or stone materials are available in local region, and the access and traffic is relatively available, a gravity dam may be built. The spillway may be arranged while flooding may be discharged directly over the upper portion of the gravity dam.

5.5.3 If the dam site is located in a narrow V-shaped or U-shaped valley, and the rock foundation of the dam abutment on both banks is good, an arch dam may be built. With regard to an arch dam, the construction cost is usually relatively low, the construction period is short, and the flooding may be discharged over the dam crest or through the openings in the dam body.

5.6 Layout of the project

5.6.1 The discharge structure of an earth and rockfill dam shall be arranged on the rock foundation near the bank, and can adopt an open spillway and tunnel.

- If the terrain on both banks is abrupt and there is a saddle-shaped bealock with appropriate elevation, or the terrain on both banks is gentle and the ridge is saddle-shaped, and there is a channel convenient for returning the flooding into the river in the region downstream of the site where an auxiliary dam water retaining structure needs to be built, the river bank spillway should be laid out.
- If the spillway inlet is laid out on such position, and the flood discharge route thereafter is led to another river channel, the scheme shall be reasonable inform an economic aspect and the flood control problem of another river channel should be properly handled.
- When the aforesaid advantages are unavailable near the dam site or in a remote part of the upstream region, the spillway should be laid out on the dam abutment.

5.6.2 With regard to concrete or masonry gravity dam projects, the overflow dam section should be used as the main release structure.

- The release structure shall be laid out so that the discharged water flow direction is consistent with the axis of the original river for the benefit of the stability of the downstream river bed.
- When the geological conditions vary along the axis of the dam, the overflow dam shall be laid out on the relatively solid foundation.

5.6.3 With regard to concrete or stone masonry arch dam projects, the overflow dam section should usually be used as the main release structure. The release structure shall be laid out so that the discharged water flow direction is consistent with the axis direction of the original river. If there is saddle-shaped bealock with appropriate elevation on both banks, and there is a channel that is convenient for returning the flooding into the river in the downstream region, the spillway may be laid out on the river bank.

5.6.4 With regard to multi-purpose hydraulic projects built on a river with high sediment concentration, the release structure and the water intake structure shall be laid out with consideration given to the reservoir sedimentation and the influence on the erosion of the downstream river bed. For a hydraulic project located on a river with high sediment concentration, bottom openings or a tunnel with large diameter will usually be provided to discharge flood and sediment during the flood season to extend the life of the reservoir.

5.6.5 The water requirements of the downstream ecological environment shall be considered in the layout of the project structures.

6 Water retaining structure

6.1 Gravity dam

6.1.1 Main design contents of gravity dam

a) Selection of the dam site and project layout: including selecting the dam site and dam axis, and determining the layout of the project structures, the structural type of the dam body and the connection between the dam body and both banks or the other structures. The layout of the flood discharge structures shall be considered first so that the discharge water does not wash out the dam foundation and other civil works, and the flow pattern and scouring and silting do not affect the use of other civil works.

b) Design of the release structure of the dam body: by calculating the runoff regulation, study and compare the layout and dimensions of the release structure, determine the flood level and design the energy dissipation and anti-scour facilities for the release structure. An ungated spillway should be preferentially considered for the dam, and the flood discharge openings and reservoir emptying openings may be prepared according to the functional requirements.

c) Structural calculation of the dam body: determine the load sustained by the dam body, analyse the load combination and perform a dam body stability and stress analysis (including anti-seismic calculation).

d) Dam body zoning and material design: determine the materials used for the dam body, perform the dam body zoning, and raise the performance index requirements for various zones as well as the requirements for raw materials, the water-cement ratio of the concrete, cement content and aggregate grading.

e) Selection of the dam base surface and design of the foundation treatment: according to the dam body's stability and base stress requirements, clarify the requirements for the base surface, dam foundation bearing capacity, anti-seepage, drainage and grouting. Design of the treatment measures for the foundation fracture, fault, fracture zone, weak intercalated layer and slope excavation

f) Temperature control design for the dam body: according to the temperature control and crack prevention requirements, determine the parting, partitioning, layers of the dam and temperature control measures for the dam body.

6.1.2 Dam body structure

6.1.2.1 The gravity dam's crest shall be higher than the verified flood level, the wave wall shall be arranged on the upstream side of the dam crest and the elevation of the wall wave shall be higher than the top elevation of the wave. The height difference (freeboard) between the wave wall crest and normal reservoir level or verified flood level may be calculated in accordance with the formula (1); the highest of the wave wall crest elevations shall be used as the selected elevation.

$$\triangle h = h_p + hz + hc \quad (1)$$

where

$\triangle h$ is the height difference between the wave wall crest and the normal reservoir level or the verified flood level, in m;

$h_{1\%}$ is the wave height, to be calculated as per Appendix A, in m;

h_p is the wave height of corresponding frequency P is calculated according to Appendix A (P=1% for gravity dam), in m;

h_c is the safety marginal height, select according to Table 2, in m.

6.1.2.2 The crest width of non-overflow dams shall be determined in accordance with the profile design and operation management requirement, which shall not be less than 3 m. Reinforced concrete wave wallsconnected with the dam body and with a height of 1.2 m should be prepared on the upstream side of the damcrest. Handrails should be set on the downstream side. The mobile hoist is laid out on the dam crest, the damcrest width should meet the requirement for installing the portal crane tracks.

6.1.2.3 The cross-section of a non-overflow dam section should be determined according to the following requirements:

a) The basic cross-section of a non-overflow dam section should be triangular, and its peak should be near the dam crest; the dam crest structure should be arranged above the basic cross-section.

b) The upstream surface of the dam body may be vertical plane, oblique plane or folded plane. The upstream slope of a gravity dam should be 1:0 to 1:0.2. If the dam slope is a folded plane, the elevation of the folded slope point shall be optimized and determined in combination with the layout of the water intake and outlet of hydropower station as well as the downstream dam slope.

c) The downstream slope of dam may be 1:0.6 to 1:0.8, and selected according to the stability and stress requirements, and in combination with the upstream dam slope at the same time. With regard to the monolithic gravity dam with the key groove in the transverse joint for the grouting, the dam slope may be selected with consideration given to the effect of joint stress on the adjacent dam sections.

6.1.2.4 The cross-section of the overflow dam section should be determined according to the following requirements:

a) As for the weir surface curve of the overflow dam section, the power curve may be used if an open overflow is arranged; the overflow may be designed as a parabola, if the breast wall is arranged and used for water retaining. Other weir surface curves can also be applied based on study and testing.

b) The leading edge length, hole number, orifice type, size and weir crest elevation of the overflow section of the surface outlet for flood discharge shall be determined through comprehensive comparison with consideration given to the reservoir operation and flood discharge requirements, anti-scour and energy dissipation of the downstream river bed and both banks, as well as the relationship between the dam body and the adjacent structures.

c) The energy dissipation and the anti-scour methods for the downstream areas of flood discharge usually include deflecting flow, underflow, surface flow, roller bucket and joint dissipation of energy, and shall be reasonably selected in accordance with the dam body height, geological and topographical conditions of the downstream river bed and both banks of the dam foundation, and the changes in water depth of the downstream river channel, and in combination with the requirements for ice discharging and debris discharging.

d) Under local atmospheric pressure conditions, in order for the surface spillway and shallow opening to release routine flooding with a gate in fully opened mode, negative pressure should not occur near the weir crest; when the gate is partially opened, slight negative pressure can be allowed based on study; In case of releasing a design flood with the fully opened mode, the negative pressure cannot exceed 0.03 MPa; in case of releasing a verified flood with the fully opened mode, the negative pressure cannotexceed 0.06 MPa;

e) Gate slot should be properly selected to avoid cavitation erosion resulting from the excess negative pressure.

f) The Ogee section of the overflow dam should be selected according to the downstream energy dissipation structures.

g) Gate pier types and dimensions should meet the requirements of the structural arrangement and flow conditions. In case of a plain gate, the pier at the gate slot should be thick enough and strong enough to meet the requirements of the structure.

h) When the overflow dam also functions as an ice passage, it should be dimensioned taking the ice data into account; water depth on the weir should be greater than the ice block during the drift period; ice blocks should drain freely without damaging the downstream facilities; measures, such as guide walls and retaining walls, should be implemented downstream; the gate pier's head should be in the shape of an acute angle.

i) The spillway of the stone masonry gravity dam should be in the open mode. If a gated spillway is implemented, the structural stability and stress of both the gate pier and the chamber should be analysed.

6.1.2.5 The outlets in the dam body should meet the following requirements:

a) The outlets in the dam body may be arranged in the lower section of the overflow dam section or in a dedicated outlet section of the dam, and shall be equipped with energy dissipation facilities.

b) The outlets in the dam body may employ a free flow tunnel or pressure hole, in which the pressure flow and non-pressure flow shall not occur alternately.

c) The free flow tunnel should be in straight line form on the plane; when a bend is required, it is necessary to perform a specific analysis, and verify the scheme through hydraulic model testing.

d) The lining protection for the release tunnel in the dam body shall be determined in accordance with the hydraulic condition, orifice size, sediment characteristics of water flow and operating conditions of the orifices. As for the pressure tunnel with relatively high internal water pressure and the pressure section of the free flow tunnel, the steel lining or high-performance concrete should be used, and the steel lining shall be combined with the surrounding concrete reliably.

6.1.3 Section design of the dam body

6.1.3.1 The section design of dam body shall comply with the following principles:

a) With regard to the concrete gravity dam, the outcomes of the calculations with the material mechanics method and the rigid body limit equilibrium method shall be used as the basis for determining the dam body section.

b) The design section of the gravity dam shall be controlled by the basic load combination, and reviewed with the special load combination. When it is reviewed with the special load combination, the spatial interaction of the dam body may be considered or other appropriate measures may be taken, but the design section should not be controlled by the special load combination.

c) With regard to a gravity dam with transverse joints, its strength and stability calculations shall be considered as a planar issue; one dam section or unit width may be taken for calculation. In case the transverse joints are grouted, the strength and stability may be calculated taking the integer effect of the dam body into account.

6.1.3.2 Load and load combination

a) The loads acting on a gravity dam include the following loads:

1) The weight of the dam body (including the permanent equipment), and the concrete unit weight of the dam may be 23.5 kN/m^3 to 24.0 kN/m^3. And the unit weight of stone masonry may be 22.0 kN/m^{3}to 24.0 kN/m^3.

2) Hydrostatic pressure, the upstream hydrostatic pressure shall be determined according to the water level specified by the reservoir's function and load combination, and the downstream hydrostatic pressure shall be determined according to the corresponding unfavourable downstream water level.

3) Uplift pressure shall be calculated taking into consideration the distributed force acting vertically on the entire calculated sectional area. When the curtain grouting and drainage holes are placed, the uplift pressure may be discounted according to the seepage pressure coefficient.

4) Sediment pressure shall be determined according to the hydrological and sediment characteristics of the river at the dam site, the project structures layout, the operating mode of the reservoir and the calculation of sediment scouring and silting, in order to determine the sediment thickness in front of the dam.

5) Wave pressure shall be calculated based on the wave elements (wave height, wavelength). Different load combinations shall adopt different wind speeds, basic combinations can adopt annual maximum wind speeds with a recurrence period of 50 years, and special combinations can adopt the annual maximum wind speed for years.

6) Ice pressure shall be taken into account when a thick ice layer is formed on the surface of reservoirs in severe cold areas.

7) Earth pressure, the role of backfilling on the dam.

8) The hydrodynamic pressure on a certain flow surface shall be taken into account when overflow of the dam crest or the dam surface is adopted.

9) Seismic loads, including the seismic inertia force of dam body and seismic hydrodynamic pressure; when the ground peak acceleration ≥0.1g, anti-seismic calculations should beperformed.

10) Other loads that may occur.

b) Load combination

The load combination for the stress calculation of the anti-sliding stability and dam body stress for a concrete gravity dam should consist of the basic combination and the special combination. The load combination shall be subject to the provision of Table 3, and the other possible disadvantageous combination shall be considered when necessary.

Table 3 - Load combination table

Load combination	Main considerations	Load										Notes
		Dead weight	Hydrostatic pressure	Uplift pressure	Silt pressure	Wave pressure	Ice pressure	Earthquake load	Hydrodynamic pressure	Soil pressure	Other loads	
Basic combination	(1) Under situation of normal reservoir level	√	√	√	√	√	-	-	-	√	√	The soil pressure shall depend on whether the earth and stones are filled out of the dam body (the same below).
	(2) Under situation of design flood level	√	√	√	√	√	-	-	√	√	√	
	(3) Under situation of freezing	√	√	√	√	-	√	-	-	√	√	The hydrostatic pressure and uplift pressure shall be calculated per the corresponding reservoir water level in winter.
Special combination	(1) Under situation of verified flood	√	√	√	√	√	-	-	√	√	√	
	(2) Under situation of earthquake	√	√	√	√	√	-	√	-	√	√	The hydrostatic pressure, uplift pressure and wave pressure shall be calculated as per the normal reservoir level, or may be specified separately when it has been demonstrated.

NOTE 1 The most disadvantageous load combination in the calculation shall be selected according to the actual possibility for all kinds of loads to act simultaneously.

NOTE 2 A dam constructed by stages shall be calculated by stages according to the corresponding load combination.

NOTE 3 The situation of construction period shall be checked if necessary, as a special combination.

NOTE 4 If the situation exists that the drainage equipment is prone to be blocked during servicing and must be frequently repaired is considered according to the geologic and other conditions, the situation of drainage failure shall be considered, as a special combination.

NOTE 5 With regard to situation of earthquake, the wave pressure will not be included when considering winter season and ice pressure.

6.1.3.3 The stress calculation for dam shall comply with the following provisions:

a) For the stress calculation for the dam, the following contents may be calculated in whole or in part, or other contents may be calculated according to the project's scale and dam body structure:

1) Calculate the stress on the selected section of the dam body (select the calculation section according to the dam height, including the dam foundation surface, the section of the folded slope and other sections to be calculated);

2) Calculate the local stress on the weak positions (such as caverns, water drainage pipelines and intake conduit for hydropower station) of the dam body;

3) Calculate the stress of the individual positions (such as gate pier, breast wall, guide wall and water intake supporting structure) of the dam body;

4) Analyse the internal stress on the dam foundation when necessary.

b) The vertical normal stress of the dam heel and the dam toe of the gravity dam foundation surface shall meet the following requirements:

1) Servicing period: Under various load combinations, the vertical normal stress of the dam heel shall not contain the tensile stress and the vertical normal stress of the dam toe shall be less than the allowable compressive stress of the dam foundation;

2) Construction period: A tensile stress of less than 0.1 MPa is allowable within the vertically normalstress of the concrete gravity dam toe.

c) The dam body stress of a gravity dam shall meet the following requirements:

1) Servicing period: The vertical normal stress on upstream surface of the dam body shall not contain the tensile stress (for calculation of uplift pressure); the maximum principal compressive stress of the dam body shall not be greater than the allowable compressive stress of the materials;

2) Construction period: The principal compressive stress on any sections of the dam body shall not be greater than the allowable compressive stress of the materials; on the downstream surface of the dam body principal tensile stress of not more than 0.2 MPa is allowable for the concrete gravity dam..

d) The allowable stress of the concrete shall comply with the following provisions:

1) The allowable stress of the dam body concrete shall be determined as per the standard strength of the concrete divided by the safety factor. The standard strength of the concrete refers to 150 mm cubestrength with age of 90 days, and the strength assurance factor is 80%.

2) The compression resistance safety factor of the dam body concrete shall not be less than 4.0 for the basic combination and shall not be less than 3.5 for the special combination (excluding the condition of earthquakes). If there is the tensile requirement for the local concrete, the tensile-strength safety factor shall not be less than 4.0.

3) When the seismic load is taken into account, the compressive safety coefficient of the dam concrete is 4.1, and the tensile safety coefficient is 2.4.

e) The vertical normal stress of the gravity dam foundation and the dam body cross-section shall be calculated in accordance with the formula (2):

$$\sigma_y = \frac{\sum W}{A} + \frac{\sum Mx}{J} \quad \text{..... (2)}$$

where

σ_y is the vertical normal stress of the calculation section, in kPa;

$\sum W$ is the sum of normal force on the calculation section acted upon by all loads (including uplift pressure, the same below) on the dam section or 1m dam length, in kN;

∑M is the sum of the torque of all loads acting on the dam section or 1m dam length to the is the calculation section centroid axis, in kN·m;

A is the calculation section area of the dam section or 1m dam length, in m^2;

X is the distance from calculation point to the centroid axis on the calculation section, in m;

J is theinertia moment of the calculation section on the dam section or 1m dam length to the centroid axis; for the rectangular section it is $h^2/6$, wherein h refers to calculation section height, in m^4.

f) The calculating of the anti-sliding stability of the dam body shall comply with the following provisions:

1) The calculating of the anti-sliding stability of the dam body mainly includes the following contents:

(1) Calculate the anti-sliding stability of the dam body along the dam foundation surface;

(2) Calculate the deep sliding stability for the dam foundation when the weak structural surface or low-angle dip fracture exists in the rock mass of the dam's foundation.

2) The anti-sliding stability of the gravity dam body may be calculated according to the shear-break strength formula (3) or the shear strength formula (4).

$$K' = \frac{f'\sum W + C'A}{\sum P} \quad \text{.....} \quad (3)$$

where

K' is the anti-sliding stability safety factor is calculated as per the shearing resisting strength;

∑W is the normal component of all loads (including uplift pressure, the same below) acting on the dam body to the sliding plane, in kN;

∑P is the tangential component of all loads acting on the dam body to the sliding plane, in kN;

f' is the shearing resisting friction coefficient of the contact surface between the dam body concrete and the dam foundation;

C' is the shearing resisting cohesive force of the contact surface between the dam body concrete and the dam foundation, in KPa;

A is theSectional area of the dam foundation contact surface, in m^2.

$$K = \frac{f\sum W}{\sum P} \quad \text{.....} \quad (4)$$

Where

K is the anti-sliding stability safety factor calculated as per the shear strength;

f is the shear friction coefficient of the contact surface between the dam body concrete and the dam foundation.

3) With regard to the deep slide of the gravity dam foundation, the slide plane of the double-taper wedge is most common and disadvantageous; for the deep stability calculation against sliding, the sliding body is divided into two parts which are imposed in the limit equilibrium state respectively with

the equal safety factor method, as shown in Figure 1. The deep anti-sliding stability of the gravity dam foundation may be calculated as per the shear-break strength formulas (5) and (6) or the shear strength formulas (7) and (8):

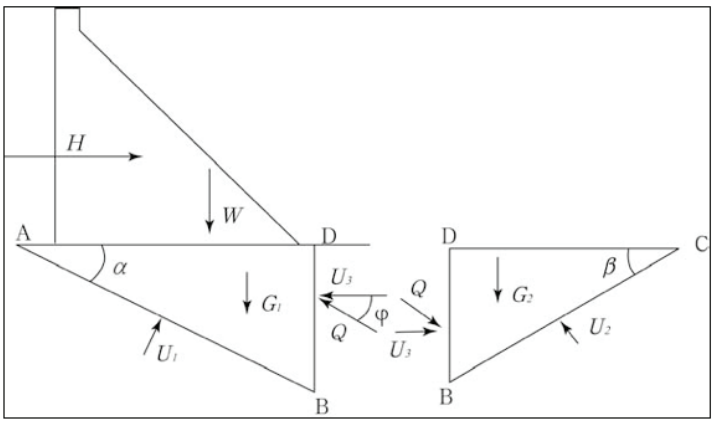

Figure 1 - Schematic diagram of slide pane of double-taper wedge

(1) When the stability of block ABD is considered:

$$K_1' = \frac{f_1'\left[(W+G_1)\cos\alpha - H\sin\alpha - Q\sin(\varphi-\alpha) - U_1 + U_3\sin\alpha\right] + c_1' A_1}{(W+G_1)\sin\alpha + H\cos\alpha - U_3\cos\alpha - Q\cos(\varphi-\alpha)} \quad \text{..... (5)}$$

(2)When the stability of block BCD is considered:

$$K_2' = \frac{f_2'\left[G_2\cos\beta + Q\sin(\varphi+\beta) - U_2 + U_3\sin\beta\right] + c_2' A_2}{Q\cos(\varphi+\beta) - G_2\sin\beta + U_3\cos\beta} \quad \text{..... (6)}$$

The anti-sliding stability safety factor K' is solved as per $K'=K_1'=K_2'$.

Where

K_1' and K_2'	is the anti-sliding stability safety factor calculated as per the shearing resisting strength;
W	is the vertical component of all loads (excluding the uplift pressure, the same below) acting on the dam body, in kN;
H	is the horizontal component of all loads acting on the dam body, in kN;
G_1 and G_2	is the vertical acting force of the weight of rock masses ABD and BCD, in kN;
f_1' and f_2'	is the shearing resisting friction coefficient of the sliding surfaces AB and BC;
c_1' and c_2'	is the shearing resisting cohesive force of the sliding surfaces AB and BC, in kPa;
A_1 and A_2	is the area of surfaces AB and BC, in m^2;
α and β	is the intersection angle between the surfaces AB and BC and the horizontal plane, in °;

U_1, U_2 and U_3 is the uplift pressure on surfaces AB, BC and BD, in kN;

Q is the force acting on surface BD, in kN.

Φ is the intersection angle between force acting on surface BD and the horizontal plane; to be selected upon demonstration; for safety concern, it may take 0°.

(3) If the stability of block ABD is considered:

$$K_1 = \frac{f_1\left[(W+G_1)\cos\alpha - H\sin\alpha - Q\sin(\varphi-\alpha) - U_1 + U_3\sin\alpha\right]}{(W+G_1)\sin\alpha + H\cos\alpha - U_3\cos\alpha - Q\cos(\varphi-\alpha)} \quad \text{..... (7)}$$

(4) If the stability of block BCD is considered:

$$K_2 = \frac{f_2\left[G_2\cos\beta + Q\sin(\varphi+\beta) - U_2 + U_3\sin\beta\right]}{Q\cos(\varphi+\beta) - G_2\sin\beta + U_3\cos\beta} \quad \text{..... (8)}$$

The anti-sliding stability safety factor K is solved as per $K=K_1=K_2$.

Where

K_1 and K_2 is the anti-sliding stability safety factor calculated as per the shear strength;

f_1 and f_2 is the shearing resisting friction coefficients of sliding surfaces AB and BC.

4) The anti-sliding stability calculation for the gravity dam body shall meet the following requirements:

(1) The anti-sliding stability analysis shall be calculated in accordance with the shear-break strength formula. The calculation may be performed according to the shear strength formula when the rock mass of the dam foundation is relatively weak, such as soft rock or a weak structural surface;

(2) The anti-sliding stability safety factor K' and the safety factor K for the deep sliding stability calculation for the dam foundation shall not be less than the values required in Table 4 and Table 5.

Table 4 - Anti-sliding stability safety factor K' calculated in accordance the shear-break formulas

Load combination		**K'**
Basic combination		3.0
Special combination	(1) Checked flood situation	2.5
	(2) Earthquake situation	2.3

Table 5 - Anti-sliding stability safety factor K calculated in accordance with the shearing formulas

Load combination		**K**
Basic combination		1.05
Special combination	(1) Checked flood situation	1.00
	(2) Earthquake situation	1.00

6.1.4 Dam body construction

6.1.4.1 The galleries and passages in the dam shall comply with the following provisions:

a) The galleries and passages in the dam shall be designed for multiple purposes including the foundation grouting, drainage, safety monitoring, inspection and maintenance, operation, traffic within dam and the requirement of the construction period. Under the premise of meeting the operational and construction requirements, the galleries and passages shall be combined, and the quantity and dimensions of the galleries and passages shall be minimized.

b) Usually, a gallery should not be arranged for a low dam; when the dam height is more than 30 m or thegrouting equipment is limited, a foundation grouting gallery shall be arranged.

- The concrete thickness of the gallery floor should not be less than 3m, the concrete thickness between the gallery and the upstream dam face shall meet the anti-seepage requirements (usually 0.05 to 0.1 times water head acting on the dam face) and shall not be less than 3m, and the distance to other release tunnels should not be less than 3m to 5m.
- The longitudinal gradient of the foundation grouting gallery shall be less than 45°; safety platforms and handrails shall be arranged by sections for a long gallery with relatively steep gradient. The elevation difference of the safety platform is usually 15m to 20m.
- When the gradient of both banks is more than 45°, the foundation grouting gallery may be arranged by layers and connected with vertical shafts.

c) The section of gallery in the dam may employ arched or rectangle shape.

- The section size of the foundation grouting gallery shall be determined according to the size and operating requirements of the drilling and grouting machine and tools, with a width in the range of 2.5m to 3.0m and a height in the range of 3.0m to 3.5m.
- The size of other galleries shall be able to ensure their functions and free passage, with a width not less than 1.2m and a height not less than 2.2m.

d) Sufficient lighting facilities and good ventilation conditions shall be provided in the gallery; all the kinds of electrical equipment and lines shall be properly electrically-insulated. Gravity drainage can be used when the corridor bottom is lower than the verified tailwater level; sumps should be provided to pump out the seepage when the corridor bottom is lower than the verified tailwater level.

e) The access bridge behind the dam should be built on the downstream dam face above the downstream high water level, and be coordinated with the layout of the caverns and galleries in the dam body.

f) Effective firefighting measures should be implemented in the gallery and the water pump chambers

6.1.4.2 The joints of the dam body shall comply with the following provisions:

a) The division of longitudinal and transverse joints shall be determined through comprehensive comparison in accordance with the geological and topographical conditions, the dam body layout, section size of the dam body, and the temperature stress and construction conditions. The interval between transverse joints should usually be 15 m to 20 m and the interval between longitudinal joints should usually be 15mto 30m.

b) When the transverse joints are expansion joints or subsidence joints, they shall be built as permanent joints, the joint surface will not be grouted and water-stop measures shall be taken near the upstream surface. In the following cases, the transverse joints should be temporary joints and be grouted in whole or in part:

   1) A monolithic gravity dam is used for the benefit of dam body strength and stability if the valley is narrow;

   2) The adjacent dam sections are connected to the whole to improve the stability of dam body on the bank slope if the bank slope is relatively steep;

   3) The adjacent dam sections are connected to the whole to improve the rigidity of the dam body for the dam sections located in a weak-fracture zone;

   4) The adjacent dam sections are connected to the whole to improve the anti-seismic property of the dam body for the meizoseismal area with a peak ground acceleration greater than 0.2 g.

c) The setting of the interval between transverse joints shall be adapted to the dam structure, such as pipes embedded in the dam, release tunnel, diversion bottom outlet and overflow surface outlet on the dam crest. With regard to the dam section on a bank slope, the transverse joints should be set at the positions with breaks or turnings.

d) The longitudinal joints are not usually necessary for medium/low dams, but may be considered due to the limitation of placing capacity or the temperature control requirements.

   - The longitudinal joints may be combined at certain elevation; if they are extended to the dam face, they should intersect with the dam face vertically.

   - On the longitudinal joint surface, the horizontal key groove shall be set, and the grouting system shall be buried for grouting.

e) The longitudinal and transverse joints should be partitioned into several areas with the grout stop plates for grouting. The surface area of each grouting area may be 200 m^2 to 400 m^2, its height may be 10 m to 15 m and the grouting pressure may be 0.1 MPa to 0.3 MPa. The grouting should be performed duringthe low-temperature season; the dam body's stable temperature is usually adopted for joint groutingstability.

f) The thickness of placement blocks partitioned by horizontal construction joints is usually 1.5 m to 4.0 m,and the smaller value is chosen when it is close to the bedrock surface.

   - Before placing the concrete on the upper layer, it is necessary to wash the horizontal construction joints, pave 20mm to 30mm thick cement mortar or fine concrete, and the horizontal construction joints between adjacent placement blocks in same dam section shall be staggered.

   - When the horizontal construction joint intersects with the top arch of the gallery, the distance from the horizontal construction joint above the gallery to the gallery top shall not be less than 1.5m.

6.1.4.3 The waterstop and drainage of the dam body shall comply with the following provisions:

a) The waterstop facilities shall be laid out below the maximum tailwater level of the upstream surface (including wave wall), overflow plane and downstream surface of gravity dam transverse joints, and around the positions from where the galleries and tunnels in the dam pass through the joints.

b) The waterstop strips on the overflow plane should be welded to the hydro-mechanical structural embedded parts of the gate bottom sill to form an enclosed structure. The waterstop facility of the wave wall shall be connected to the waterstop in the dam body.

c) The waterstop in the transverse joint near the upstream surface may employ a layer of 1.0 mm to 1.2 mm of a thick copper water-stop strip; the transverse joint from the waterstop strip to the upstream dam facemay be filled with flexible sealing material.

- The copper waterstop strip should be made into a "} " shape; the length of strip buried into the concrete on each side should not be less than 0.2 m to 0. 25 m.
- The gravity dam with a dam height less than 30m may employ plastic or rubber water-stop strips; the appropriate standard models shall be selected in accordance with the working head, climatic conditions, position and construction convenience, and effective measures shall be taken to prevent deformation during installation.

d) The water-stop strip for a transverse joint shall be properly connected to the dam foundation, and the depth of a water-stop strip buried into the bedrock may be 0.3 m to 0.5 m.

e) If there are drainage galleries in the gravity dam, vertical or nearly vertical drainage piping shall be installed downstream of the impervious barrier of the upstream surface of the dam body.

- The lower part of the drainage pipe shall be connected to the longitudinal drainage gallery, and the upper part shall be connected to the upper gallery or dam crest (or below the overflow surface) for the convenience when overhauling.
- The drainage pipe may be in the form of a drawn tube, drilled holes or precast non-fine concrete; the spacing of the pipes shall be 2m to 3m and the inner diameter of the pipes shall be 0.15m to 0.25m.

f) Water permeating into the drainage pipe may be collected in the longitudinal drainage gallery, imported to the water-collecting well along the catch drain or collecting pipe and then be drained with a water pump or drained to the downstream side by automatically flow. The section of a discharge ditch usually is 0.3 m×0.3 m and the bottom slope is 3‰. When constructing the drainage pipe, it is necessary to prevent it from being blocked by concrete or sundry items.

g) For the seepage proofing of a stone masonry dam, either concrete (reinforced concrete) facing can be placed on the upstream side of the dam body or concrete core walls can be set up near the upstreamsurface. The facing slabs or core walls should be no thinner than 300 mm and their bottom end thickness should be 1/30 to 1/60 of the maximum water head.

6.1.4.4 The zoning of the dam body materials shall comply with the following provisions:

a) The cement, aggregates, water, admixture and additives for the dam concrete shall meet the provisions of the current national standards.

b) The dam concrete shall be zoned according to different positions and different conditions, as shown in Figure 2. The zoning performance requirements shall be subject to the provisions of Table 6.

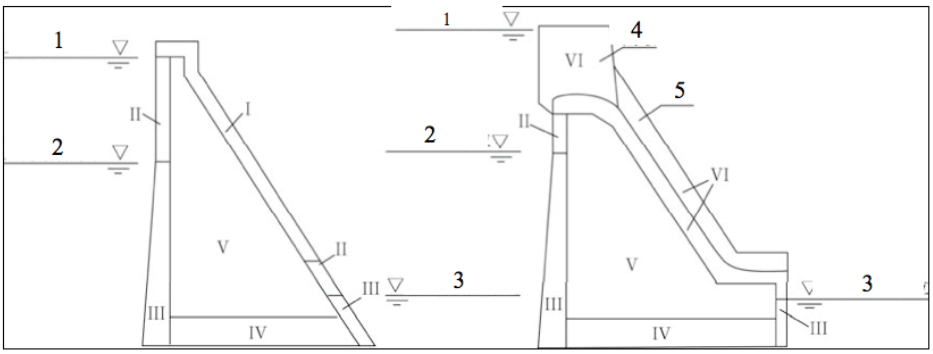

Key

1 maximum upstream water level

2 minimum upstream water level

3 minimum downstream water level

4 gate pier 5 guide wall

I area of concrete on the outer surface of the dam body above the upstream and downstream water levels

II area of concrete on the outer surface of the dam body in upstream and downstream water level changing areas

III area of concrete on the outer surface of the dam body below upstream and downstream water levels

IV area of foundation concrete of the dam body

V area of concrete within dam body

VI area of concrete in anti-scouring positions (such as overflow surface, release opening, dividing wall and gate pier)

Figure 2 - Dam body concrete zoning diagram

Table 6 - dam concrete zoning performance requirements

Are-as	Strength	Anti-per-meability	Frost resisting	Anti-scouring	Anti-erosion	Low heat	Maximum water-ce-ment ratio	Main elements for zoning
I	+	-	++	-	-	+	+	Frost resisting
II	+	+	++	-	+	+	+	Frost resisting and anti-cracking
III	++	++	+	-	+	+	+	Anti-permeability and anti-cracking
IV	++	+	+	-	+	++	+	Anti-cracking
V	++	+	+	-	-	++	+	
VI	++	-	++	++	++	+	+	Anti-scouring and wear-resisting
NOTE In the table, the items marked with "++" are the main control factors for selecting the concrete grade for various areas, the items marked with "+" are the items for which requirements should be increased and the items marked with "-" are the items for which the requirements need not to be increased.								

c) There should not be more than two strength grades of concrete in the same placement block, the grade difference should not be more than two and the minimum dimension of the zoning thickness should be 2 m to 3 m.

d) The strength of the concrete around big orifices such as the diversion bottom openings, diversion pipe and water releasing tunnels in the dam body as well as that of the concrete for the dam body with peak ground acceleration 0.2g shall be appropriately improved.

- When selecting the strength grades of concrete, it is necessary to consider the tensile stress, shearing resisting strength or principal stress generated due to the temperature, seepage pressure and local stress concentration.
- The strength grades of concrete in the dam body shall not be lower than $C_{90}10$ (as per the cube specimen with side length of 150mm fabricated and cured with standard method; the compressive strength with an assurance rate of 80% measured with the standard testing method within 90-day age should not be less than 10MPa) and the strength grades of concrete on the overflowing surface shall not be lower than $C_{28}25$ (as per the cube specimen with side length of 150mm fabricated and cured with the standard method; the compressive strength with the assurance rate of 95% measured with the standard test method within 28-day age should not be less than 25MPa).

e) In addition to the aforesaid strength requirement, the dam concrete also shall meet the requirements for anti-seepage, frost resistance, anti-scouring and wear resistance and corrosion resistance durability and low-heat properties according to the operating conditions of dam and the specific situation including the local climate.

f)T he seepage resistance grade of dam concrete shall be adopted as per Table 7 according to the positions and hydraulic gradient.

Table 7 - Minimum allowable value of the seepage resistance grade of the dam concrete

Item No.	Position	Hydraulic gradient	Seepage resistance grade
1	In dam body		W2
2	Other positions of dam body should be considered as per the hydraulic gradient.	i＜10	W4
		10≤i＜30	W6
		30≤i＜50	W8
		i≥50	W10

NOTE 1 In the Table, i refers to hydraulic gradient;
NOTE 2 With regard to the structures suffering from the water corrosion action, its seepage resistance grade shall be particularly tested and studied, but shall not be lower than W4;
NOTE 3 The seepage resistance grade of the concrete should be determined with the testing method specified in the relevant codes. The seepage resistance grade may also be measured with a specimen with 90-day age according to the time for dam body to sustain water pressure action.

g) With regard to the regions with frost resistance requirements, the frost resistance grade for the dam concrete shall be selected with reference to Table 8 and according to multiple factors including the climatic region, frost-thaw cycle times, local microclimate conditions of the surface, moisture saturation degree, importance of structural member and the complexity of overhaul.

Table 8 - Frost resistant grade of the dam concrete

Climatic regions	Severe cold region		Cold region		Mild region
Annual frost-thaw cycle times (times)	≥100	<100	≥100	<100	
The positions which are important in structure, endures serious cold and are difficult to overhaul: The overflow dam with a flow velocity of more than 25m/s, overflowing ice, heavy sediment or heavy bed load, deep holes or overflow surface at other position and second phase concrete.	F400	F300	F300	F200	F100
Positions which endure serious cold but have overhaul conditions; (a) Water level changing area of upstream surface of a gravity dam in winter; (b) Overflow surfaces of spillway and water outlets with flow velocity less than 25m/s.	F300	F250	F200	F150	F50
The positions which endures relatively serious cold: The exposed position on the shaded side of the gravity dam	F250	F200	F150	F150	F50
The positions which slightly endure cold: The exposed position on the sunny side of a gravity dam	F200	F150	F100	F100	F50
Underwater part or internal concrete of the gravity dam	F50				

NOTE 1 The annual frost-thaw cycle times refer to the alternation times for air temperature dropping from above +3°C to below -3°C and then rising up to above +3°C in one year and the rise-fall times of pre-set design water levels when average daily air temperature is lower than -3°C in one year, whichever is greater;
NOTE 2 The climate zoning standard is:
Severe cold region refers to a region with the lowest average monthly temperature lower than or equal to -10°C;
Cold region refers to a region with the lowest average monthly temperature higher than -10°C, but lower than or equal to -3°C;
Mild region refers to a region with the lowest average monthly temperature higher than -3°C.
NOTE 3 The sunny side refers to the surface which will not be shaded by the massif or building if most of days in winter are fine and the average sunlight time is 4hrs. Otherwise, it shall be considered the shaded side.
NOTE 4 The frost resistance grade of concrete in the region with lowest average monthly temperature lower than -25°C should be determined through study according to the specific situation.

h) According to the durability requirement for the dam concrete, the water-cement ratio of the concrete should not be more than the values listed in Table 9.

Table 9 - Maximum water-cement ratio of concrete

Climatic regions	Dam concrete zoning					
	I	**II**	**III**	**IV**	**V**	**VI**
Severe cold and cold regions	0.55	0.45	0.50	0.50	0.65	0.45
Mild region	0.60	0.50	0.55	0.55	0.65	0.45

i) If the ambient water is erosive, cement with good anti-erosion performance shall be selected; the water-cement ratio of the concrete in the external water level changing area and the underwater concrete may be reduced by 0.05 compared to Table 9. For the concrete for the high-speed flow area, the low-flow regime high-strength concrete or high-strength silicon powder concrete with anti-scouring and wear-resistance properties shall be used.

6.1.4.5 Materials of the masonry dam body should meet the following regulations:

a) The masonry stone should be new, complete and hard in texture without a spalling layer or cracks. The masonry stone should be roughly square in shape, basically parallel and roughly smooth on the upper and lower sides, and have a thickness greater than 200 mm without sharp corners or thin edges.

b) The binding materials for stones are cement mortar or concrete. The Poisson ratio μ of the masonry blocks should be 0.2 to 0.25.

c) The ultimate compressive strength f_{cc} of the masonry stones can be selected according to the content in Table 10.

Table 10 - Ultimate axial compressive strength of the masonry blocks

Unit: MPa

Masonry block	**saturated rock compressive strength**	**Strength**					
		Concrete		**Cement mortar**			
		15.0	10.0	12.5	10.0	7.5	5.0
Masonry stone	≥100	24.0	18.8	18.8	16.0	13.2	11.2
	80	22.0	17.1	17.1	14.8	12.2	10.0
	60	19.2	14.8	14.8	12.8	10.8	8.8
	50	17.3	13.2	13.2	11.6	10.0	8.0
	40	14.6	11.8	11.8	10.0	8.8	7.2
	30	10.8	10.0	10.0	8.8	7.0	6.4

6.1.5 Dam foundation treatment design

6.1.5.1 The dam foundation treatment principles shall comply with the following provisions:

a) The foundation treatment scheme shall be determined on the basis of ascertaining the geological conditions of dam site and analysing the dam's requirement for the foundation. The dam foundation treatment scheme shall meet the following requirements:

- The dam foundation has sufficient strength to support the dam body, and the control seepage flow and reduce the seepage pressure;
- The dam foundation could meet the requirement for stability against the seepage flow; the dam foundation has sufficient integrity, homogeneity and rigidity and can meet the anti-sliding stability requirements and reduce the differential settlement;
- The dam foundation has sufficient durability to prevent the deterioration of the rock mass' nature under the long-term action of water.

b) The dam foundation treatment design includes the dam foundation excavation, anti-seepage and drainage, consolidation grouting, treatment of the fault breakage zone and the weak structural surface, and anti-seepage treatment for the karst.

6.1.5.2 The dam foundation excavation design shall comply with the following provisions:

a) The position of the foundation surface shall be determined through economic and technical comparison in accordance with the requirement of the dam structure for the foundation, the foundation reinforcement treatment effects and the construction process, construction period and expenses. The excavation quantity may be reduced through the foundation reinforcement treatment measure and upper structure adjustment measure on the basis of satisfying the dam foundation strength and stability requirements.

- When the dam height is over 50m, it may be built in the middle area of the slightly-weathered to moderately-weathered bedrock;
- When the dam height is less than 50m, it may be built on the middle to upper part of the moderately-weathered bedrock.
- With regard to the dam monolith at the relatively high position, the criteria may be appropriately lowered.

b) The form of the foundation surface of a gravity dam shall be determined according to the geological and topographical conditions and the requirements for upper structure.

- The height difference of the foundation surface of dam monolith between upstream and downstream sides should not be too great, and the foundation surface should tilt slightly toward the upstream side;
- When the height difference of foundation surface is too great or the foundation surface tilts toward the downstream side, it should be excavated into big step form with an obtuse angle;
- The height difference between steps shall be coordinated with the dimension of the concrete placement blocks and the position of the sub-joint, and adapt to the thickness of the dam body concrete at the dam toe;
- Usually, the height difference should not exceed 5m; the step should be connected to a gentle slope with gradient greater than 1:0.5.
- With regard to the positions with great foundation height difference, the partition of the dam monolith should be adjusted or necessary treatment should be performed.

c) The foundation surface of the bank slope dam sections on both banks shall be excavated for sufficiently wide steps along the dam axis, or other structural measures shall be taken to ensure the lateral stability of the dam body.

d) If local engineering geological flaws, such as mud-mingled fractures of the surface layer, weathered balloon, fault fracture zone, joint intensity area, karst filling material and weak intercalated layer at shallow burial depth exist in the foundation, these should be removed in combination with the foundation excavation or should be removed locally and then treated.

e) In the dam foundation excavation design, the corresponding requirements shall be increased for the blasting pattern to protect the dam foundation rock mass from being damaged or exposed to adverse consequences. For a rock mass prone to weathering and argillization, corresponding protective measures shall be taken.

6.1.5.3 The consolidation grouting for the dam foundation shall comply with the following provisions:

a) The design of the consolidation grouting for the dam foundation shall be determined according to the engineering geological conditions of the dam foundation, dam height and grouting test data, and shall meet the following provisions:

   1) The consolidation grouting should be performed within a certain upstream and downstream scope of the dam foundation; when fractures are developed in the dam foundation rock mass, and the rock mass is groutable, the consolidation grouting may be performed within the entire scope of the dam foundation, and the grouting scope may be expanded beyond the dam foundation according to the dam foundation's stress and geological conditions;

   2) The consolidation grouting should be performed for the dam foundation on the upstream side of the impervious curtain.

   3) The consolidation grouting shall be reinforced in the fault fracture zone or the affected zones on both sides, or for other geological flaws.

   4) After the karst cave and channel in the foundation have been excavated and backfilled, the consolidation grouting shall be appropriately reinforced for their periphery according to the distribution of karst.

b) The distance between grouting holes and between rows of consolidation grouting holes may be in the range of 3 m to 4 m, or determined through grouting testing. The consolidation grouting depth shall bedetermined according to the dam height and the geological conditions after excavation, and may be in therange of 5 m to 8 m.

c) The consolidation grouting holes should usually be arranged in quincunx form; with regard to the relatively extensive fault and fracture zones, the holes shall be specially arranged. The direction of the grouting holes shall be determined according to the occurrence of main fractures and in combination with the construction conditions so as to make them penetrate more fractures.

d) The consolidation grouting of the dam foundation in the upstream area of the curtain and at the position with a geological flaw should be performed after the 3 m to 4 m concrete weighted blanket has beenapplied, and the consolidation grouting at other positions may be performed in the form of a concreteweighted blanket according to the geological conditions; upon demonstration, the consolidation groutingalso may be performed without concrete weighted blanket or by sealing with levelling concrete.

e) In line with the principle of not lifting the foundation rock mass and cover concrete, the consolidation grouting pressure should be increased as much as possible.

   - When there is a weighted blanket, the pressure may be in the range of 0.4MPa to 0.7MPa according to the thickness of the blanket.

   - When the grouting is sealed with levelling concrete, its grouting pressure should be determined through grouting testing, and may be 0.2MPa to 0.4MPa.

- With regard to the bedrock and soft rock with developed low-angle structural surface, its grouting pressure shall be determined through grouting testing.

6.1.5.4 The anti-seepage and drainage design for the dam foundation shall comply with the following provisions:

a) The dam foundation anti-seepage is usually performed by curtain grouting, that is, the cement paste is grouted into the rock fracture rock to form a curtain and reduce the seepage from dam foundation and the dam abutment. The impervious curtain shall meet the following requirements:

1) Reduce the seepage of the dam foundation and around the dam and prevent leaking water flow adversely influencing the stability of the dam foundation and the slopes of both banks;

2) Prevent seepage failure on the weak structural surfaces of the dam foundation, in a fault fracture zone, rock mass fracture fillings and the rock stratum with poor impervious performance;

3) Lower the uplift pressure and seepage of the dam foundation within the allowable value under the joint action of the curtain and the dam foundation drainage;

4) Have reliable continuity and sufficient anti-permeability and durability.

b) With regard to the anti-seepage and drainage design for the dam foundation, the specific measures shall be determined on the basis of the engineering geology, hydrogeological condition and grouting test data for the dam foundation, in combination with the reservoir function and dam height and with full consideration given to the relationship between the anti-seepage and the drainage. The central line of the grouting curtain is generally located at the width of the dam bottom 1/10 from the dam surface.

c) The depth of the curtain grouting should be determined according to the hydrogeological conditions of the rock foundation, and shall comply with the following provisions:

1) Enclosed curtain: When a reliable relative confining bed exists beneath the dam foundation, and the burial depth is relatively shallow, the impervious curtain shall be extended 3 m to 5 m into this rock stratum. The permeable rate q shall be 5 Lu.

2) Suspended curtain: When the burial depth of the relative confining bed beneath the dam foundation is relatively deep or the distribution of the relative confining bed is irregular, the curtain depth shall be determined through study with reference to the seepage computation, with consideration given to the engineering geological condition and uplift pressure of the dam foundation, and in combination with the engineering experience, and should be selected within the scope of 0.3 to 0.7 times the water head.

d) To prevent bypassing dam seepage on the dam abutment of both banks, the length of the impervious curtain extended into the bank slope and the direction of the curtain axis shall be determined according to the engineering geology and hydrological conditions. The curtain should be extended to the relative confining layer or the intersection between normal reservoir level and underground water level, and should be connected with the curtain on the river bed.

e) The impervious curtain may be arranged in a single row.

- With regard to the sections with relatively poor geological conditions, especially with developed rock mass fractures or possible seepage deformation, or if it is found that it is necessary to reinforce the impervious curtain, the number of curtain rows may be appropriately increased.

- When the curtain is formed with several rows of grouting holes, one row of holes shall be drilled to the design depth, and the depth of the remaining rows of holes may be from 1/2 to 2/3 of design depth.

- The distance between holes forming the curtain may be 1.5m to 3m and the distance between rows may be slightly less.
- The holes should be drilled through the main fracture and bedding of the rock mass, and may be constructed as inclined holes with 0° to 10° angle tilting to the upstream side.

f) The curtain grouting shall be performed after dam body concrete of certain thickness has been placed as weighted blanket. The grouting pressure shall be determined through testing; generally, 1.0 to 1.5 times static head in front of the dam should be selected in the 1st section of curtain holes, and then the pressure may increase gradually in the following sections; in the hole bottom section, 2 to 3 times static head in front of dam may be selected; when grouting, the dam body concrete and dam foundation rock mass shall not be lifted.

g) If there are foundation grouting drainage galleries in the dam body, the main drainage holes of the dam foundation may be constructed on the downstream side of the impervious curtain in the gallery, and the distance from the main drainage hole on the foundation surface to the curtain hole should not be less than 2m.

- When the dam height exceeds 30 m, 1 to 2 rows of auxiliary drainage holes may be constructed on the downstream side of the main drainage holes if necessary. The distance between the main drainage holes may be 2 m to 3 m, and the distance between the auxiliary drainage holesmay be 3m to 5m.
- When the relative confining bed and the gentle dip angle rock stratum exist in the foundation, the drainage holes shall be reasonably laid out according to their distribution situation.

h) When the dam height is relatively low, the bedrock conditions are relatively good and are composed of aquitard (when permeability coefficient is less than 0.1 m/day), the curtain may not be necessary andonly the drainage is provided to reduce the seepage pressure of the dam foundation, but the consolidationgrouting shall be performed on the upstream position of the dam foundation surface.

i) The depth of the drainage holes shall be determined according to the depth of the curtain and the consolidation grouting, as well as the engineering geology and hydrogeological conditions of the foundation:

1) The depth of the main drainage holes should be 0.4 to 0.6 times the curtain depth, and should not be less than 10m; when a fractured artesian aquifer or deep permeable area exists in the dam foundation, the main drainage holes shall be extended into this position in addition to the seepage prevention measures.

2) The depth of the auxiliary drainage holes may be 6 m to 12 m.

j) When the duration of the high tailwater level is relatively long or the water permeability of the rock mass is relatively great, the enclosed impervious curtain should also be constructed at the dam toe.

k) The special drainage facility may be arranged on the dam foundation of the bank slope dam section; the drainage tunnels may be constructed in the massif of the bank slope when necessary with the drainage holes also constructed.

l) When the wall of the drainage hole might collapse or the drainage hole is drilled through a weak structural surface and mud-mingled fractures, the corresponding protective measures shall be implemented.

6.1.5.5 Treatment of fault fractured zone and weak structural plane:

a) The fault fracture zone exposed in the scope of the dam foundation is mainly composed of hard tectonic

rocks. When it has little influence on the strength and compression deformation of the foundation, the rock mass of the fault fracture zone and its influence zones on both sides can be appropriately excavated. When the main component is weak tectonic rock and has certain influence on the strength and compression deformation of the foundation, it can be reinforced with a concrete plug. The depth of the concrete plug can be 1.0 to 1.5 times the width of the fault fracture zone or determined according to the calculation. The treatment of the longitudinal fault fracture zone running upstream and downstream of the dam foundation shall properly extend beyond upstream and downstream of the dam foundation.

b) Concrete displacement, a concrete deep tooth wall, a concrete plug and other measures can be adopted to improve the shear strength of the weak structure surface and increase the resistance of the tailrock for different buried depths of the weak structure surface. Anti-slide pile, pre-stressed anchor cable and chemical grouting can also be adopted when necessary.

c) The anti-seepage treatment methods for karst include anti-seepage curtain grouting, anti-seepage wall, which shall be selected according to the scale, development law, filling properties, permeability and other conditions of the karst. For karst caves or karst fissures with strong permeability, the high-pressure grouting treatment can be carried out after the necessary excavation and then filled with concrete or preparing the mortar blocking holes (wells). The grouting materials can be selected according to the scale of the karst caves and karst fissures and the filling materials, such as pure cement slurry, cement mortar, cement clay slurry, cement fly ash slurry. If necessary, large diameter boreholes can be drilled to pour high-flow fine aggregate concrete.

6.1.6 Slope treatment

6.1.6.1 Slope treatment and reinforcement design should conform to the following principles, which are determined after economic and technical comparison between multiple schemes.

a) Factors such as the slope topographical and geological conditions, construction technology and the difficulty should be comprehensively considered. The relationship between the building and the slope should also be considered in the case that the slopes are related to the building.

b) If measures are jointly required for slope treatment and reinforcement, the technical features and suitability of these measures should be comprehensively considered, so as to form an inter-related control and reinforcement system.

c) Treatment measures should be preferentially considered. Reinforcement measures can be provided in case the treatment measures cannot meet the requirements or cannot be applied.

d) The design should be improved in accordance with the geological conditions disclosed during the construction period and the information fed back from the safety monitoring.

6.1.6.2 For slopes related to new buildings, based on the premise of meeting the layout of the buildings, the direction and shape for slope excavation should be determined as per the topographical and geological features and should ensure slope stability. If the direction and shape are contradictory to the building layout, the layout of the buildings should be adjusted, if permitted.

6.1.6.3 One or more of the following measures can be used for slope treatment and reinforcement:

a) Deloading, slope excavation, and increasing the load at the slope toe.

b) Drainage includes the interception and draining at the slope surface and above the slope crest as well as the slope body draining.

c) Slope protection including various supporting and stone masonry protection, artificial vegetation applied

for soil slopes, and shotcrete, fibre shotcrete, wire mesh shotcrete, positive flexible support and geo-synthetics, etc. for rock slopes.

d) Slope anchorage, including anchor rods, anti-sliding plugs, etc.

e) Retaining structures, including types of retaining walls, slide-resistant piles, soil nailing, flexible passive supporting measures, etc.

6.1.6.4 Complete surface interception and drainage systems should be set up in the slope treatment and reinforcement. If the slope stability is closely related to the rock or soil mass saturation and the ground water rise caused by surface water infiltration, then seepage-proofing measures should be provided both within the slope and near the slope area.

6.1.6.5 When anchoring measures are taken to reinforce the slope, the technical feasibility and economic rationality for combining the following anchoring and retaining structures should be studied:

a) Anchor rod and retaining wall;

b) Anchor rod and slide-resistant pile;

c) Anchor rod and concrete lattice;

d) Anchor rod and concrete slab.

6.1.6.6 Environmental protection should be considered when selecting the slope treatment and reinforcement measures, which should be in harmony with the surrounding buildings and environment.

6.1.7 Temperature control and dam body anti-cracking

6.1.7.1 The temperature control principles shall comply with the following provisions:

a) With regard to a medium dam with a dam height of more than 30 m, the temperature control design shallbe performed, and temperature control standards and crack-prevention measures shall be proposed.With regard to a low dam, the temperature control and crack-prevention design shall be performed withreference to similar engineering experience.

b) For temperature control design, it is necessary to collect the annual average temperature and variation in amplitude of the dam site area, the monthly average /ten-day average air temperature over the years, the amplitude and duration of the sudden drop in air temperature as well as the corresponding frequency, river water temperature, dam foundation ground temperature, sunlight and similar reservoirs' water temperature.

c) For temperature control design, it is necessary to study the allowable temperature difference of the foundation, temperature difference between inside and outside the dam and maximum temperature in the dam, and pay attention to the insulation design for cold wave and winter.

d) The ultimate tensile value of concrete in the restrained zone of a foundation with 28-day age shall not be less than 0.85×10^{-4}. For the construction quality to be uniform and high, the deformation modulus of bedrock and concrete is similar and the placement block is uniformly placed at short intervals, the allowable temperature difference of a normal concrete foundation shall be determined according to the provisions in Table 11.

Table 11 - Allowable temperature difference ΔT of the concrete in the restrained zone of the normal concrete foundation

Height to foundation surface (h)	Long side length of placement block (l)				
	Less than 17m	17m~21m	21m~30m	30m~40m	40m to entire block
0~0.2l	26~24	24~22	22~19	19~16	16~14
0.2l~0.4l	28~26	26~25	25~22	22~19	19~17

e) For the exposed surface of concrete curing of less than 28-day age, insulation measures shall be taken; for the important positions like the highly-restrained zone of the foundation and upstream surface, the surface shall be strictly protected. For the foundation concrete, upstream surface and other important positions exposed for a long period, insulation measures should also be considered for the exposed concrete surface after 28 days.

f) In the construction process, the dam blocks shall rise up uniformly, the height difference between adjacent dam blocks should not exceed 10 m to 12 m and the placing interval between adjacent dam blocks shouldbe less than 30 days.

6.1.7.2 For temperature control, the following measures may be taken:

a) According to the anti-cracking requirements, the strength grade of the concrete at the dam body foundation position should not be lower than $C_{90}20$, and the strength grade of concrete in the dam body shall not be lower than $C_{90}10$. For the upstream face, the strength grade of concrete shall be comprehensively determined according to the anti-seepage, anti-cracking and frost resistance requirements and construction conditions.

b) It is necessary to reasonably arrange the concrete construction procedures and placing quantity all year round. It is advisable to pour the concrete in the foundation confined area during the low temperature season, and to pour the concrete at night in the high temperature season, and dam concrete pouring in a severe cold area shall be avoided in winter.

c) Under the premise of not influencing the concrete strength and durability, the following measures shall be taken to reduce the heat value:

   1) Use micro-expanding cement with relatively low-heat value or relatively high magnesium oxide;

   2) Place low-slump concrete or hard concrete;

   3) Add efficient additive;

   4) Take comprehensive measures like improving the concrete grading and adding the admixture.

d) The following measures may be taken to lower the maximum temperature of the concrete and to meet the joint grouting requirement:

   1) Control the concrete lift thickness, radiate the heat with the top surface of the concrete lift and reduce the temperature rise due to cement hydration. In the summer, reduce the concrete lift thickness but the thickness should not be less than 1.0 m; ensure the normal interval and it is permitted to water or spray the surface of the concrete to accelerate the heat radiating on surface.

   2) Reduce the temperature of the concrete during construction. Spray water on the coarse aggregate pile, spray mist, increase aggregate pile height, take material from the ground ridge, mix with the

cooling water, add ice when mixing the concrete and strictly control the transportation time of the concrete and the exposure duration before covering the concrete lift so as to reduce the temperature rise during the transportation and placing process for the concrete.

3) Bury the cooling water pipe in the dam body and the supply water for cooling. The water is supplied to control the maximum temperature of the concrete during the early period, to control the temperature difference between the inside and outside of the dam body during the medium period and to reach the joint grouting temperature during the later period. When the water is supplied, the temperature difference between the dam body concrete and the cooling water should not exceed 25°C and the temperature drop speed of the dam body should not be greater than 1°C /d

6.2 Arch Dam

6.2.1 Main design of arch dam

a) In addition to meeting the requirements in Section 6.1.1, the arch dam design should attach importance to the selection of the arch dam shape, and to the geological and hydrogeological conditions at the arch abutment areas.

b) Arc dams are classified by their thickness-height ratio into the categories of thin arch dam (thickness-height ratio less than 0.2), middle arch dam (thickness-height ratio less than 0.2 to 0.35), and thick arch dam (thickness-height ratio greater than 0.35). Dam structural issues due to flooding discharging over the dam should be studied for thin arch dams.

c) Facilities for reducing or emptying water in the reservoir should be considered for arch dams. Anti-seismic design is required for arch dams in seismic areas.

6.2.2 Dam body structure

6.2.2.1 Arrangement of the arch dam crest should meet the requirements in Sections 6.1.2.1 and 6.1.2.2.

6.2.2.2 Flood discharge over the dam crest and through the dam body openings is often used. The dam crest discharge mode should be preferentially used. Openings through the dam body should be placed away from the highly stressed zone and the foundation stress restraint zone.

6.2.2.3 When the flood is discharged through the arch dam body, the following requirements shall be met:

a) The discharged flow shall return to the channel smoothly, a sufficient safe distance shall be kept between the discharged flow and the dam toe, sufficient water cushion depth shall be maintained on the downstream side, and the dam body, stability of massif on both banks and operational safety of other structures shall not be threatened.

b) When the flood discharge is relatively significant, the longitudinal extension or transverse diffusion of the dropping points or the colliding energy dissipation should be researched.

c) Attention should be paid to the adverse influence of flood discharge atomization on the downstream massif on both banks, the electrical equipment and the traffic; and the corresponding protective measures shall be taken when necessary.

d) When the flood is discharged through an opening in the dam body, the trash prevention and discharge measures should be installed.

6.2.3 Arch dam shape design

6.2.3.1 The selection of the arch dam shape shall meet the following requirements:

a) The arch dam shape shall be selected in accordance with the valley shape (aspect ratio) at the dam site, the geological conditions, abutment stability, dam body stress, flood discharge layout and construction conditions.

b) When selecting the arch dam shape according to the valley shape at the dam site, the following provisions shall be met:

   1) With regard to a V-shape valley, a double-curvature arch dam may be selected;

   2) With regard to a U-shape valley, a single-curvature arch dam or double-curvature arch dam may be selected;

   3) When the symmetry of the river valley at the dam site is relatively poor, the horizontal arch of the dam body may be designed into an asymmetric arch;

   4) When the shape of the river valley is irregular or there is local deep groove in the river bed, it should be designed into an arch dam with a cushion abutment.

c) When the geological and topographical conditions are unfavourable, the arch dam shape shall be selected in accordance with the following requirements:

   1) A curvature-changing arch dam with tabular arch rings on both ends and thrust at springer tilting to the deep section of massif may be adopted;

   2) An arch dam with variable-thickness arch thickening toward the springer gradually or with cushion abutment may be adopted;

   3) When the upper bedrocks of both banks of the dam site are relatively poor or the terrain is relatively wide, the gravity abutment or thrust block may be designed to connect to the arch dam.

d) The design of the arch dam shape shall meet the following requirements:

   1) A variable-thickness and curvature-changing arch with gentle change in dam body stress shall be adopted when necessary, and shall meet the requirement for calculation stress of dam body.

   2) The maximum central angle of the horizontal arch ring may be in the range of 75° to 110°, and the intersection angle between the tangent line of intrados at the springer and the contour line of the available rock surface shall not be less than 30°.

   3) The vertical cantilever section shall be reasonably designed, and the overhang degree of designed upstream surface of designed cantilever should not be greater than 0.3:1. Under the premise of satisfying the dead weight tensile stress control standard and the layout requirement for dam orifices during designed construction period, the greater overhang degree of designed downstream surface may be selected (horizontal to vertical).

e) According to the dam body stress, abutment stability and specific engineering conditions, curvature-changing arch forms including parabola, ellipse, hyperbola, multi-centred circle and logarithmic spiral may be adopted.

6.2.3.2 General steps of the arch dam shape design

a) It is necessary to first define the curvilinear equation of the arch dam axis, its central angle and its corresponding coordinate position. When the axis of first dam is arched, it is necessary to first define the circle centre position, first radius of dam axis and first semi-central angle.

b) For the arch dam shape design, it is necessary to determine the crown cantilever, the horizontal arch ring and the preliminarily prepared arch dam shape, and to optimize the shape design.

c) The position of the crown cantilever is usually at the lowest point of the available bedrock section line of the river valley; when the bottom of the river valley is relatively flat, it may be at the central position of the valley. The design of the crown cantilever section includes the crown and bottom thickness, the upstream surface curve and the downstream surface curve.

- The top arch thickness is the same as the dam crest thickness, and is usually is greater than 3.0m; the bottom thickness may be preliminarily defined as per the experience and then further adjusted according to the stress analysis results.
- The upstream surface of a double-curvature arch dam may be an arc or an arc combination, a quadratic curve, a cubic curve and other kinds of curves; the upstream surface of a single-curvature arch dam may be a straight line or a folded line.
- When the upstream and downstream surfaces are curved, the dam faces shall be smooth and continuous to obtain proper stress distribution conditions for the dam body.

d) For the horizontal arch ring, it is necessary to first determine the elevation of the arch ring; the quantity of arch rings may be 5 to 10. The arch ring types may include a holo-centric circular arch, multi-centre circular arch, elliptic arch, parabolic arch and log spiral; generally, the curvature gradually decreases from the crown to the springer. The horizontal arch ring may be addressed with the centreline of the arch ring and the function of the arch thickness; the centreline of the arch ring may be addressed with the equation of the curvature radius with the central angle as the independent variable.

e) The initial shape of the arch dam may be obtained by determining the crown cantilever and the horizontal arch ring. On this basis, the rationality of the arch dam shape can be inspected with the numerical analysis method, and the appropriate shape should usually be obtained through several iterations and optimization. Usually, the stress distribution of the arch dam and the acting force at the springer will be calculated with the arch-cantilever method, and the anti-sliding stability of the arch dam abutment will be reviewed with the rigid body limit equilibrium method.

f) The optimization design of the arch dam shape is performed for the purpose of obtaining the most economic scheme that meets the design requirements under the specific conditions within a short time. The design is meant to arrange several constraint conditions first and to regard the volume of the arch dam as the optimized objective function; the constraint functions include the geometric constraint, stress constraint and stability constraint; and then the arch dam shape will be solved with the mathematical programming approach. The structural stress analysis is usually performed with the arch-cantilever method.

6.2.4 Stress and stability analysis

6.2.4.1 Load and load combination

a) The loads acting on the arch dam include: dead weight of the dam body, hydrostatic pressure, uplift pressure, sediment pressure, wave pressure, ice pressure, hydrodynamic pressure, earthquake load, temperature load and other possible loads.

b) Load combination:

Arch dam design load combination can be divided into the basic combination and the special combination, according to the provisions of Table 12.

Table 12 - Combination for action effects

Load combination	Main consideration		Load category									
			Dead weight	Hydrostatic pressure	Temperature load		Uplift pressure	Sediment pressure	Wave pressure	Ice pressure	Hydrodynamic pressure	Seismic load
					Designed normal temperature rise	Designed normal temperature drop						
Basic combination	1. Normal reservoir level		√	√	√	-	√	√	√	√	-	-
	2. Normal reservoir level		√	√	-	√	√	√	√	-	-	-
	3. Designed flood level		√	√	-	√	√	√	√	-	-	-
	4. Dead water level (or the lowest operating water level)		√	√	-	√	√	√	√	-	-	-
	5. Other common adverse load combinations											
Special combination	Checked flood situation		√	√	-	√	√	√	√	-	√	-
	2. Earthquake situation	1) Basic combination 1 + seismic load	√	√	√	-	√	√	√	√	-	√
		2) Basic combination 2 + seismic load	√	√	-	√	√	√	√	-	-	√
		3) Common low water level + seismic load	√	√	-	√	√	√	√	-	-	√
	3. Construction period	1) No grouting	√	-	-	-	-	-	-	-	-	-
		2) Construction flood occurred without grouting	√	√	-	-	-	-	-	-	-	-
		3) Grouting	√	-	√	√	-	-	-	-	-	-
		4) Construction flood occurred without grouting	√	√	-	√	-	-	-	-	-	-
	4. Other rare adverse load combination											

NOTE 1 In the above load combinations, controlled load combinations can be selected for calculation according to the actual situation of the project.
NOTE 2 In areas with frequent earthquakes, measures should be taken to close the arch in time when the construction period is longer. When necessary, the seismic load is considered in the load combination.
NOTE 3 Construction conditions 3) grouting, shall be necessary accounting, as a special combination.

6.2.4.2 When the arch dam stress is analysed, the following contents may be calculated in whole or in part, or other contents may also be calculated according to the project's scale, the specific situation of the dam and the various design stages:

a) The stress distribution on various calculation sections (including the arch abutment, arch crown and other positions with stress to be calculated);

b) The principal stress of upstream/downstream surfaces of dam body on various calculation points;

c) The local stress of the weak positions (caverns and drainage pipelines) of the dam body;

d) The inner stress of the dam foundation (particularly the weak intercalated layer and fault) should be analysed when necessary.

6.2.4.3 In the arch dam stress analysis, the following issues shall be studied according to their importance and necessity:

a) The influence of different shapes and layouts on the dam body stress distribution;

b) The influence of foundation deformation on the dam body stress;

c) The influence of big caverns in the dam body on the dam body stress;

d) The influence of staged impounding, staged construction and the construction procedures on the dam body stress;

e) The influence of the arch-joint sealing temperature on the dam body stress; the arch-joint sealing temperature that is favourable for dam body stress should be selected first;

f) The influence of concrete creep on the dam body stress;

g) Before grouting transverse joints in the dam body, it is necessary to verify the dam body stress and stability against the overturning of the individual dam section;

h) The influence on the dam body stress if the gravity abutment, thrust block or peripheral joint are set for an arch dam.

6.2.4.4 Select the following methods to analyse the arch dam stress:

a) The arch-cantilever method is the basic method for arch dam stress analysis. The arch dam with a relatively complex situation (such as big caverns in the arch dam or complicated foundation conditions), the finite element method shall also be adopted for analysis in addition to the calculation with the arch-cantilever method.

b) When the stress is analysed with the arch-cantilever method, the arch-cantilever grid system shall be reasonably laid out in combination with the topographical and geological conditions, and the grid shall be densified at the position with relatively large stress gradient changes.

c) When the stress is analysed with laid out finite element method, the foundation calculation scope shall not be less than 1.5 times the dam height, and the stress calculation result shall be subjected to equivalent treatment.

- The subdivision of laid out unit shall achieve the accuracy required by the design,
- The type of unit shall be reasonably selected in combination with the arch dam shape,
- The calculation model shall be close to the actual situation and the construction process shall be taken into account for the calculation of dead weight of dam body.

6.2.4.5 The control indices shall comply with the following provisions:

a) When calculating with the arch-cantilever method, the principal compressive stress and principal tensile stress of the dam body shall meet the following provisions on the stress control indices:

1) Allowable compressive stress. The allowable compressive stress of the concrete is equal to the compressive ultimate strength of the concrete divided by the safety factor. The ultimate compressive strength of the concrete can have the strength of 150 mm cube with 90 days of age, and the guaranteed rate is 80%. With regard to the basic load combination, the safety factor shall be 3.5; with regard to the special load combination except for the seismic conditions, the safety factor shall be 3.0.

2) Allowable tensile stress. Under the premise of keeping the abutment stable, the action scope and value for the tensile stress of the dam body are reduced by adjusting the shape of the dam. With regard to the basic load combination, the tensile stress shall not be more than 1.2MPa; with regard to the special load combination except for the seismic conditions, the tensile stress shall not be more than 1.5MPa.

b) When calculating with the finite element method, it is necessary to also calculate the "finite element equivalent stress". The principal tensile stress and principal compressive stress of the dam body obtained as per "finite element equivalent stress" shall comply with the following provisions for the stress control index:

1) Allowable compressive stress. It shall be subject to the provision of item a).

2) Allowable tensile stress. With regard to the basic load combination, the tensile stress shall not be more than 1.5 MPa; with regard to the special load combination except for the seismic conditions, thetensile stress shall not be more than 2.0 MPa.

c) In the arch dam stress analysis, the dam body stress and stability against overturning during the construction period shall also be verified in addition to the operating period. Before grouting the seams of the dam body, the maximum tensile stress of the dam body shall not be more than 0.5 MPa, and thepoint of resultant force shall be within the scope of 2/3 in the middle of the dam body thickness under thesingle action of dam body dead weight. When the dam body encounters a construction flood before thetransverse joints are grouted, the stability against overturning safety factor for the dam body shall not beless than 1.2.

d) When seismic load is taken into account, the compressive safety coefficient of the dam concrete is 4.1, and the tensile safety coefficient is 2.4.

6.2.4.6 The arch dam stability analysis shall comply with the following principles:

a) When evaluating the stability of the abutments on both banks, it is necessary to perform the following basic work:

1) Check out the engineering geological and hydro-geologic prospecting data for the rock mass on both banks;

2) Comprehend the test conditions for the physical and mechanical properties of the rock, structural surface and filler, study the test results, select and use the design data reasonably;

3) Determine all kinds of acting forces applied on the abutment;

4) Adopt the reasonable stability analysis method.

b) When studying the abutment stability, it is necessary to comprehensively analyse the influence factors such as the layout of the dam (including the dam axis, plane layout, arch abutment structure, shape and flood release method), the dam stress condition, foundation treatment and construction method.

c) With regard to the geological data for the arch dam stability analysis, in addition to the conventional survey, it is also necessary to ascertain the occurrence (including directivity of discontinuous fracture in groups), unevenness, intensive degree, connectivity rate, filler and diastrophism of main weak structural surfaces which influence the sliding of the rock mass or might cause relatively significant deformation to the abutment, as well as the possible combination of the structural surface, the nature and its distribution characteristics of subsurface seepage flow in the rock mass of the abutment.

d) The rock mechanics indices for the abutment stability analysis, including the compression resistance, shearing resistance, tensile strength, modulus of deformation, Poisson's ratio and permeability coefficient, shall be obtained through laboratory testing of samples

e) The abutment stability analysis mainly involves the study of the possible sliding problem for the rock mass; however, when the area near the downstream side of the abutment might suffer relatively significant deformation due to a relatively significant fault or weak belt, the deformation problem of the abutment shall also be studied in particular.

f) The anti-sliding stability calculation shall meet the following requirements:

1) The boundary of the possible slide mass in the anti-sliding stability analysis is usually composed of several slip surfaces and free faces. The slip surfaces refer to all kinds of structural surfaces in the rock mass, particularly the weak structural surface; the free faces refer to the earth's surface or the weak structural surface. The slip surfaces shall be determined after obtaining the most likely sliding failure form through research on the basis of engineering geological prospecting.

2) The shear strength coefficient of the slip surface and the rock mass on both sides (including filling in the slip surface) shall be determined through joint study by the designer, geologist and testers according to the sampling test values, in combination with the actual situation of the rock mass, the possible changes after water filling and the engineering treatment measures taken, and with reference to similar engineering experience.

3) The abutment stability calculation shall include the acting force transferred from the dam body, the dead weight of rock mass, seepage pressure and earthquake load. The numerical computation method for abutment anti-sliding stability usually employs the rigid body limit equilibrium method. The acting force transferred from the dam body is calculated by using the corresponding result calculated with the arch-cantilever method. A high arch dam or arch dam with complex geological condition also shall be analysed with the finite element method or with other methods in additional.

4) When the rigid body limit equilibrium method is used for the anti-sliding stability analysis, it may be calculated in accordance with the formula (3) or the formula (4):

5) The anti-sliding stability calculation safety factors K_1 and K_2 shall not be less than the values required in Table 13.

Table 13 - Safety factor of anti-sliding stability

Load combination		**K'**	**K**
Basic combination		3.0	1.30
Special combination	Non-earthquake condition	2.5	1.10
	Earthquake condition	2.7	/

6.2.5 Dam body construction

6.2.5.1 The joints of the dam body shall meet the following requirements:

a) The transverse joints shall be set for the concrete arch dam, which should be laid out in the radial or nearly radial direction, the transverse joint surface may be a vertical plane, the bottom joint surface of the transverse joint should be nearly orthogonal to the basic plane and the intersection angle shall not be less than 60°. If the transverse joint surface is a temporary joint, the key groove shall be set and the grouting system shall be buried. The key groove shall be in the vertical direction, and should employ a dovetail groove or arc-shaped groove.

b) The positions of and spacing between transverse joints shall be determined with consideration given to the dam foundation conditions, temperature control, stress distribution in the dam body, size of the flood-release orifice in the dam body, structural layout of caverns in the dam and the concrete placing capacity, which might cause fractures to the concrete. The spacing between transverse joints (arc length along upstream surface) should be 15 m to 25 m.

c) The joint grouting shall be applied for transverse joints and longitudinal joints. When grouting, the dam body temperature shall be reduced to the required design value. The opening width of the joints should not be less than 0.5 mm. The age of the dam body concrete on both sides of the joint should not be less than 4 months after effective measures have been taken. Only after the concretion of grouted slurry reachesthe expected strength, can the dam body retain the water and endure the force. When the dam body needsto be used for flood retention before the longitudinal (transverse) joints of the arch dam are grouted, thisshall be demonstrated in particular.

d) The joint surfaces shall be divided into several enclosed areas with grout stop plates for grouting. The water-stop strips of the upstream surface and downstream surface of the transverse joints may be used concurrently as the grout stop plates.

    - The area of each grouting area should be 200m^2 to 400m^2, and the height should be 9m to 15m.
    - The grout lifting pipeline and discharging facility for the grouting shall preferably be formed with drawn plastic tubes or with the embedded pipe and grout cell.
    - The grout inlet and outlet pipe orifices and the water drain pipe outlet in the same grouting area of the transverse (longitudinal) joint should be concentrated in the areas near the gallery or the bridge downstream of the dam.

e) The grouting pressure of the transverse (longitudinal) joint shall be determined in accordance with dam body stress and the deformation condition. In addition to the top layer, the upper part of the grouting area should have a 9m-thick concrete weighted blanket. The grouting pressure of top layer may be 0.1 MPa to 0.3 MPa.

6.2.5.2 The galleries and channels in the dam shall be arranged with full consideration given to the multiple purposes for foundation grouting, drainage, safety monitoring, inspection and maintenance, operation, traffic in the dam and the requirements of the construction period. With regard to thin arch dams, the galleries may not be arranged. The layout of the galleries may be designed with reference to the gravity dam requirements. See the requirements in Section 6.1.4.1 for the gallery layout.

6.2.5.3 The water-stop strips shall be arranged on the upstream surface of the transverse joint in the dam body, the downstream surface and overflow surface of the transverse joints below the check tailwater level as well as the contact surface between the dam body in steep slope section and side slope. The water-stop strips for the transverse joints or foundation shall be properly connected to the dam foundation; the burial depth

of connected water-stop strip in the bedrock may be 0.3 m to 0.5 m. The waterstop may be designed withreference to the gravity dam requirements. See the requirements in Section 6.1.4.3 for the waterstop layout.

6.2.5.4 Vertical drain pipes should be installed in the dam body, see the requirements in Section 6.1.4.3. Drain pipes may not be necessary for the dam body of a thin arch dam in a non-frost region.

6.2.5.5 The dam body material zoning shall meet the following requirements:

a) The strength shall be regarded as the main control index for the zoning design of the dam body strength grade of concrete. Other performance indexes for the concrete shall be verified according to the requirements for different parts of the dam body; the performance indexes for the local concrete may be improved when necessary, with different strength grades defined. When the dam body thickness is less than 20 m, the strength grade of concrete shall not be zoned. The minimum layer width of the samestrength grade of concrete should not be less than 2 m.

b) The concrete mechanical and thermal indices should be comprehensively studied. In addition to meeting the low heat of hydration requirements, the concrete should have sufficient strength, especially early strength. The concrete material durability index can be selected according to the requirements in Section 6.1.4.4.

6.2.6 Dam foundation treatment

6.2.6.1 The dam foundation treatment includes the excavation, consolidation grouting, seepage control and drainage, the karst anti-seepage treatment, fault fracture zone & weak surface treatment, and should meet the requirements in Section 6.1.5. Special attention should be paid to the shape of foundation surface resulting in adverse effects on the stress distribution of the dam body.

6.2.6.2 Dam foundation excavation should meet the following requirements:

a) The usable rock surface on both banks should be excavated into a radial plane. When the excavated volume is too substantial due to a relatively thick arch abutment, the non-complete radial plane should be used. Upon sufficient demonstration, the rock surface for the abutment may also be excavated into other shapes.

b) The height difference between the upstream and downstream sides of the rock surface for the river bed section shall not be too great, and should be slightly tilted toward the upstream side.

c) The excavation blasting for the dam foundation should be designed by using presplitting blasting.

6.2.6.3 In order to improve the shear strength of the dam foundation contact surface, prevent seepage along the foundation contact surface, contact grouting shall be carried out for steep walls with a steep gradient greater than 50°to 60°. Contact grouting shall be carried out by using the consolidated grouting holes and curtain grouting holes.

6.2.6.4 When the stability and safety of the arch abutment is affected by weak structural surfaces such as the inter-bedding or dislocation within the two abutment rocks, then corresponding reinforcement measures (such as anti-slide keys, load transferring walls and high-pressure grouting consolidation) shall be implemented for the abutment foundation.

6.2.7 Temperature control

6.2.7.1 The reasonable temperature control standard and thermal cracks control measures shall be prepared, and in accordance with the natural conditions of the dam site like air temperature, water temperature and ground temperature, and the structural features of the dam body, raw materials for concrete and concrete performance.

6.2.7.2 The concrete temperature control requirements may referenced the requirements in Section 6.1.7.

6.2.7.3 The temperature field when the arch dam joint is grouted (i.e. the joint grouting temperature field) shall be adjusted according to the temperature field of the dam body concrete. The layout of the cooling water pipe and the water cooling method shall be selected for the purpose of reducing the temperature load of the arch dam. The arch dam with overhanging section shall be grouted in a timely manner. When performing joint grouting for the dam section during the high-temperature season, the external heat preservation shall be properly performed for the dam body.

6.3 Concrete faced rockfill dam

6.3.1 General provisions

6.3.1.1 The dam axis shall be determined through technical and economic comparison according to the geological and topographical conditions of the dam site, and in favour of laying out the toe-board and other structures of the project, and for convenience of construction. The dam axis should be laid in a straight line.

6.3.1.2 The rockfill dam body is allowed to be built on the dense alluvial deposit on the river bed. When the alluvial deposit contains a silty-fine sand layer and a cohesive soil layer, its safety and economic rationality shall be demonstrated in combination with the dam body stability and the deformation analysis.

6.3.1.3 When the spillway is laid out on the dam abutment, the connection between the face slab and the spillway side wall or guide wall shall be properly designed.

6.3.1.4 When determining the style and size of the structure in the layout of the project, it is necessary to comprehensively compare it in combination with the balance between the excavated volume of the rocks for the structures and the filling volume of the dam body.

6.3.2 Dam crest

6.3.2.1 The dam crest of the face rockfill dam shall not be lower than the verified flood level. In order to reduce the height required for flood control and wind and wave prevention, the upstream side of the dam crest shall be provided with the wave wall, and the elevation of the wave wall shall be higher than the elevation of the wave top. The height difference between the wave wall crown and the normal reservoir level or verified flood level may be calculated according to the formula(9). The wave wall height may be 4 m to 6 m and the wall crown shall be 1 m to 1.2 m higher than the dam crest. The barrier or curb shall be arranged on thedownstream side of the dam crest.

$$\Delta h = R_f + h_z + A \quad (9)$$

where

- Δh is the height difference between the wave wall crown and the normal reservoir level or verified flood level, in m;
- R_f is the wave run-up, to be calculated as per Appendix A, in m;
- h_z is the height difference between the wave centreline and the normal reservoir level or verified flood level, to be calculated as per Appendix A, in m;
- A is the freeboard, select according to Table 2, in m.

6.3.2.2 Settlement margin shall be reserved at the dam crest, and its value shall be determined by calculation or engineering analogy.

6.3.2.3 The dam crest width shall be determined according to the operational demand, the layout of the facilities on the dam crest and the construction requirement; the dam crest width is usually 5 m to 8 m; the dam crest shall be appropriately widened for the high dam with a height more than 100 m. When the damcrest is used for transportation, the dam crest width shall be selected according to the relevant provisions.

6.3.2.4 The elevation of the horizontal joint between the wave wall and the concrete face top should be higher than the normal reservoir level.

6.3.2.5 The dam body above the bottom elevation of the wave wall shall be filled with fine rockfill material and the pavement shall be laid. When there are roads on the dam crest, the pavement on the dam crest shall be designed as per the road standard.

6.3.2.6 The 0.6 m to 0.8 m wide access for inspection shall be arranged on the base slab upstream of thevertical wall of the wave wall.

6.3.2.7 The wave wall shall be firm and waterproof, and shall be subjected to stability and strength verification. The wave wall shall have expansion joints in which a layer of copper water-stop strips or PVC waterstop belts shall be installed, and be connected to the waterstop strips for the horizontal joint between the wave wall and the face slab.

6.3.2.8 The dam crest structure shall be economical and practical, the building design shall be beautiful and elegant and the lighting and drainage shall be properly designed.

6.3.3 Dam slope

6.3.3.1 When the dam construction materials are hard rockfill material of good quality, the gradient of the upstream and downstream dam slopes may be 1:1.3 to 1:1.4; when the dam construction materials are natural sandy gravel aggregates, the gradient of the upstream and downstream dam slopes may be 1:1.5 to 1:1.6. When damming with soft rock materials and building the dam on the soft foundation, the gradient of the dam slope shall be determined through stability calculation.

6.3.3.2 When the roads are built on the downstream dam slope, the dam slope between the roads may be adjusted in local position.

6.3.3.3 The downstream dam slope should be piled with rock blocks; the slope surface is required to be flat and have a proper appearance.

6.3.3.4 The flatness shall be required for the upstream slope surface in the cushion layer area during the construction period, and be protected in a timely manner.

6.3.4 Dam body zoning

6.3.4.1 The dam body shall be zoned according to the aggregate sources as well as the requirements for strength, permeability, compressibility, construction convenience, and economic rationality. The dam body may be zoned, from the upstream to the downstream, into the cushion layer area, transitional area, main rockfill area and downstream rockfill area. The special cushion layer area shall be arranged below the peripheral joints. The water permeability of the dam materials for the different areas should increase from the upstream to downstream according to the hydraulic transitional requirement. The dam material for the downstream rockfill area above the downstream water level is not subject to this restriction. The upstream section of the rockfill dam body shall have low compressibility. The hard stone riprap may be arranged underwater of the downstream dam toe of the dam body; this riprap area may be the integral part of the downstream cofferdam. Other zones of the dam body may be added in combination with the rock materials excavated from the structures and the aggregate sources available in the area close to the dam. Refer to

Figure 3 for the zoning schematic diagram of the hard rockfill dam body on the rock foundation.

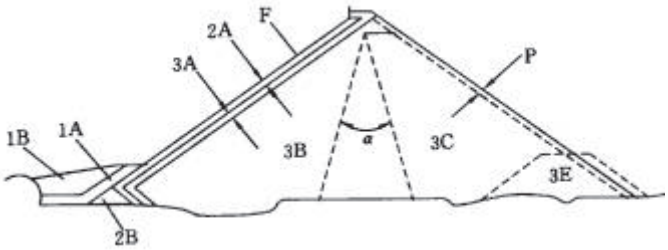

Key

1A	upstream blanket area	1B	weighty blanket area
2A	cushion layer area	2B	special layer area
3A	transitional area	3B	main rock-fill area
3C	downstream rock-fill area	3E	riprap area
P	rock block masonry	F	face concrete slab

Figure 3 - Zoning schematic diagram of the hard rock-fill dam body on rock foundation

6.3.4.2 The horizontal width of the cushion layer area shall be determined according to the dam height, terrain, construction process and economic comparison.

- When the construction is performed with the machinery including unloading materials directly by trucks or the levelling by bulldozer, the horizontal width of the cushion layer area should not be less than 3m.
- When special spreading measures are taken, the width of the cushion layer area may be reduced, and the width of the transitional area shall be increased correspondingly.
- The cushion layer area shall be extended appropriately to the downstream region along the contact surface of the bedrock; the extension length is related to the terrain of the bank slope, the characteristics of the bedrock and the dam height. The special cushion layer area with the thin layer compaction shall be arranged on the downstream side of the peripheral joint.

6.3.4.3 If the hard rockfill material is used to build the main rockfill area, the transitional area shall be arranged between the main rockfill area and the cushion layer area. For convenience of construction, the horizontal width of the transitional area shall not be less than 3 m.

6.3.4.4 When the soft rockfill material is used to build the main rock-fill area of medium/low dams, the vertical drainage area shall be arranged in the dam by the upstream side and the horizontal drainage area shall be arranged along the bottom if its permeability could not meet the free drainage requirement. The drainage capacity of the drainage area shall ensure that all the seeped water can be drained freely out of the dam; inverted filter may be arranged on the upstream side of the vertical drainage area when necessary. The rockfill (gravel) material for the drainage area shall be hard and with high weathering resistance.

6.3.4.5 With regard to the dam body built with sand and gravel, the reliable vertical and horizontal drainage areas shall be arranged.

- The top elevation of the vertical drainage area should be higher than the normal reservoir level, and the drainage capacity of the drainage area shall ensure that all the seeping water could be drained freely out of the dam.
- The necessity of arranging the transitional area between the cushion layer area and the sand-gravel main rockfill area shall depend on the grading of the sand-gravel aggregate.
- The slope protection shall be applied on the downstream side, or the excavated rock may be used for the downstream rockfill area.

6.3.4.6 If the dam foundation is a sand-gravel layer, and the inter-layer in relation to the dam materials does not meet the filtering requirement, the horizontal filter shall be arranged on the surface of the dam foundation.

6.3.5 Dam materials

6.3.5.1 The cushion layer materials may be artificial aggregates, sandy gravel materials or a mixture of both; the artificial aggregates shall be made of hard and highly weather-resistant rocks. The cushion layer material shall have good grading with a maximum particle size of 80 mm to 100 mm, the content of particles smallerthan 5 mm should be 30% to 50% and the content of particles smaller than 0.075 mm should not exceed8%. After rolling compaction, it shall have low compressibility and high shear strength, and possess goodconstruction characteristics. When damming with natural sandy gravel aggregates, the cushion layer materialshall be continuous in grading and stable in the internal structure; after rolling compaction, the permeabilitycoefficient should be 1×10^{-4} mm/s to 1×10^{-5} mm/s With regard to a concrete face rockfill dam in a cold region,the grain composition of the cushion layer material shall meet the water permeability requirement.

6.3.5.2 In the special cushion layer area, the filter materials to be used shall be those with a maximum particle size not greater than 40 mm, stable internal structure and have self-curing action to the joint roof coal ash,silty-fine sand and caulking slurry.

6.3.5.3 The transitional material shall be material which is continuous in grading and with a maximum particle size no larger than 300 mm. After rolling compaction, it shall have low compressibility, high shearstrength and free water permeability. The transitional materials may employ excavated rockfill material,screened natural sandy gravel aggregates or rock material from the excavation of the tunnel.

6.3.5.4 After rolling compaction, the hard-rock main rockfill material should have good grain composition, the maximum particle size shall not exceed the thickness of the compaction layer, the content of particles smaller than 5 mm should not exceed 20% and the content of particles smaller than 0.075 mm should notexceed 5%; it shall have low compressibility and high shear strength.

6.3.5.5 The downstream rockfill zone below the downstream water level shall be built with hard and highly weather-resistant rockfill material, and the content of particles smaller than 0.075 mm shall be controlled tobe not more than 5%; after rolling compaction, it shall drain water freely; the requirement for dam materialsfrom the downstream rockfill zone above the downstream water level may be lowered.

6.3.5.6 When damming with sandy gravel aggregate, the aggregates should be used in the dry area in the dam if the content of particles smaller than 0.075 mm is over 8%.

6.3.6 Filling standards

6.3.6.1 The filling standards for the cushion layer material, transitional material, main rockfill material and downstream rockfill material may be preliminarily selected by experience according to Table 14; in the design, the porosity or relative density, the grading and rolling compaction parameter of the dam materials

shall be specified at the same time. The design dry density may be converted on the basis of the porosity and rock density. The average dry density shall not be less than the value converted from the design porosity or relative density, and its standard difference shall not be more than 100 kg/m^3. The filling standard for thespecial cushion area shall not be lower than that for the cushion area.

Table 14 - Design porosity or relative density

Dam materials	Cushion layer material	Sand and gravel material	Transitional material	Main rockfill material	Downstream rockfill material
Porosity (%)	15~20	/	18~22	20~25	23~28
Relative density	/	0.75~0.85	/	/	/

6.3.6.2 The filling standard shall be reviewed and corrected through rolling compaction testing, and the corresponding rolling compaction parameter shall be determined. In the construction process, two kinds of parameters, namely the rolling compaction parameter and the porosity or relative density, should be used for control, and the former should be dominant.

6.3.6.3 The design index of and filling standard for soft-rock rockfill material shall be determined through the testing.

6.3.6.4 The requirement of adding water for the filling of dam materials shall be increased, and the water addition may be determined according to the experience or testing. If it has been verified through the rolling compaction test that the rolling compaction effect of the rockfill materials with high softening coefficient by adding water is not obvious, the water may not be added; when the water could not be added during the construction in wintertime in the cold region, appropriate measures shall be taken to achieve the design requirements.

6.3.7 Toe-board

6.3.7.1 The toe-board should be placed on a new, hard, erosive resistant, groutable, and moderate to weak weathering rocks.

6.3.7.2 The layout of the toe-board on the rock foundation shall be selected in accordance with geological and topographical conditions, and should be laid out horizontally; when the bank slope is very steep, other layout forms can also be adopted.

6.3.7.3 When the layout is restricted by the geological or topographical conditions, this may be remedied by adding a connection plate or backfilling concrete; the toe wall may be used to partially substitute the toe-board upon demonstration.

6.3.7.4 After the toe-board has been excavated in stage I, the secondary setting-out should be performed for the toe-board; the position of the dam axis may be adjusted appropriately when necessary.

6.3.7.5 The width of the toe-board may be determined in accordance with the permissible hydraulic gradient of the bedrock beneath the toe-board and the foundation treatment measures; its minimum width should be 3 m. The permissible hydraulic gradient should meet the provisions of Table 15. After the width of thetoe-board meets the layout requirement for grouting holes, the anti-seepage slab (reinforced concrete slabor reinforcing mesh shotcrete slab) may be arranged on the downstream side of the toe-board to extend theseepage paths and meet the requirement for hydraulic gradient; and the filter material shall be covered onthe upper surface of the anti-seepage slab and its downstream rock surface.

Table 15- Permissible hydraulic gradient of bed rock beneath the toe-board

Degree of weathering	Fresh and slightly weathered	Slightly weathered	Highly weathered	Thoroughly weathered
Permissible hydraulic gradient	≥20	10~20	5~10	3~5

6.3.7.6 The thickness of the toe-board may be less than the thickness of the connected face but shall not be less than 0.3m.

6.3.7.7 The toe-board on the sand-gravel foundation with the cut-off wall should be constructed in two sections, namely an upstream section and a downstream section. The toe-board of the upstream section shall be constructed after the completion of the cut-off wall and before filling the reservoir with water for the first time.

6.3.7.8 The downstream surface of the toe-board shall be vertical to the face plate; the height of the toe-board beneath the bottom surface of the face slab shall not be less than 0.9 m; the requirement may be lowered forthe lower dam positions on both banks.

6.3.7.9 The toe-board concrete shall have relatively high durability, anti-permeability, crack resistance and construction workability, and the requirement shall be same as that for the face slab. The durability indices of the concrete materials can be selected as per the requirements in Section 6.1.4.4.

6.3.7.10 The toe-board should employ single-layer two-way rebar; the reinforcement ratio in each direction may be 0.3% to 0.4%. The thickness of the protective layer of rebar for the toe-board on the rock foundation shall be 100 mm to 150 mm; with regard to the toe-board not on the rock foundation, the rebar should bearranged in the middle part of the toe-board section.

6.3.7.11 The toe-board shall be connected to the bedrock with anchor bars; the parameters of the anchor bar may be determined by experience. When a low-angle structural surface exists near the foundation surface of the toe-board, the parameters of the anchor bars shall be determined according to the stability requirements or the resisting grouting pressure.

6.3.8 Concrete face

6.3.8.1 The thickness of the face slab shall enable the hydraulic gradient sustained by the face slab to be no more than 200. The thickness of the face may be determined through calculation according to the formula (10); medium/low dams may employ 0.3 m to 0.4 m thick face slabs with uniform thickness.

$$t=0.30+(0.002\sim0.0035)H \qquad (10)$$

where

t is the thickness of the face slab, in m;

H is the vertical distance from the calculation section to the face slab top, in m.

6.3.8.2 The parting of the face slab shall be performed according to the dam body deformation and the construction conditions, and the spacing between the vertical joints may be 12 m to 18 m.

6.3.8.3 With regard to the face slab concreted by stages, its top elevation should be about 5m lower than the filling elevation of the concreting platform, and its horizontal joints shall be treated the same as the construction joints.

6.3.8.4 The face concrete shall have relatively high durability, anti-permeability, crack resistance and construction workability. The strength grade of the face concrete shall not be lower than C25, the anti-seepage grade shall not be lower than W8 and the frost resistance grade shall meet the requirement for freeze thawing.

6.3.8.5 The face concrete should employ high 52.5-strength grade Portland cement or ordinary Portland cement. Coal ash or other quality admixtures should be mixed into the face concrete. The quality grade of the coal ash should not be lower than grade II; and the amount of admixture should usually be 15% to 30%: the low value shall be used in the severe cold region and the high value shall be taken in the mild region. If the sand material is relatively coarse, excessive coal ash should be used to substitute for the cement to improve the concrete's performance. Air entraining admixture and water reducing admixture shall be added into the face concrete; other additives to regulate the setting time of the concrete may be added as required. The variety and amount of additives and admixtures to be used shall be determined through testing.

6.3.8.6 The face concrete shall employ grade-II aggregate. The water absorption of the sand material for the face shall not be more than 3%, the silt content shall not be more than 2% and the fineness modulus should be in the range of 2.4 to 2.8. The water absorption of the rock material shall not be more than 2% and the silt content shall not be more than 1%.

6.3.8.7 The water-cement ratio of the face concrete shall not be more than 0.50 in the mild region, and shall not be more than 0.45 in the severe cold region and cold region. The slumps at the inlet of the chute should be controlled within 30 mm to 70 mm, and the air content of the concrete shall be controlled within 4% to 6%.

6.3.8.8 The face should employ single-layer two-way rebar. The rebar should be arranged in the middle part of the face section, the reinforcement ratio in each direction should be 0.3% to 0.4% and the horizontal reinforcement ratio may be lower than the vertical reinforcement ratio. The extrusion-resisting constructional reinforcements should be arranged on both sides of the vertical joint of the peripheral joint of the high dam and adjacent peripheral joint.

6.3.8.9 The mix proportion of the face concrete shall be optimized. Quality additives and admixtures should be used to reduce the cement content and lessen the hydration heat temperature rise and contraction distortion, and to prevent panel cracks.

6.3.8.10 The foundation surface of the face slab shall be smooth overall, and shall be free from significant fluctuations; local positions shall be free from deep pits or sharp bumps. The side form shall be straight.

6.3.8.11 The face concrete should be placed in the low-temperature season; the placement temperature of the concrete shall be controlled and measures shall be taken when necessary to reduce the placement temperature.

6.3.8.12 After mould stripping, the face concrete shall be covered in a timely manner for thermal-insulating and humid-holding, be continuously sprayed with water for curing and be protected from solarisation, strong wind, cold wave and cold impact of curing water until the reservoir is filled with water or at least for 90 days. The external heat preservation shall be effectively performed for the face concrete in the cold region until the reservoir is filled with water.

6.3.8.13 When the face crack width is more than 0.2 mm or the crack is judged to be a penetrating crack,special measures shall be taken for treatment; for a concrete face rockfill dam in severe cold region, thetreatment standard for face cracks shall be strictly determined.

6.3.9 Joint and waterstop

6.3.9.1 The bottom copper waterstop strips shall be installed in the joints of the concrete face rockfill dam.

- The copper waterstop strips should be made of fine copper coiled material with an elongation percentage not less than 20%, and formed on site by compression; the transition joints should be specially machined; the thickness should be 0.8mm to 1mm.
- The tensile strength, elongation at break, Shore hardness and brittleness temperature of the PVC waterstop strips and rubber waterstop strips shall meet the design requirements.

6.3.9.2 The bottom copper waterstop strips, the middle PVC or rubber waterstop strips shall form an independent enclosed waterstop system.

6.3.9.3 The gaskets shall be installed at the bottom of the copper waterstop strip. The bituminized plank or other high-strength infill panels shall be installed in the peripheral joints.

6.3.9.4 The tensional vertical joints shall be arranged in the face slab near two abutments of the dam and the compressive vertical joints shall be arranged in the face slab in the other areas. The quantity of tensional vertical joints shall be determined according to the geological and topographical conditions, with reference to the stress-strain calculation results and in combination with the engineering experience.

6.3.9.5 The filler materials will not usually be used in the vertical joints; the joint surface shall be brushed with a thin layer of asphalt emulsion or other anti-bonding material. The vertical joints shall be within the scope of about 0.6 m away from the normal direction of the peripheral joint, and shall be vertical to theperipheral joints.

6.3.9.6 The bottom copper waterstop strips shall be installed in the compressive vertical joints. The gaskets and mortar cushion shall be arranged at the bottom of the copper waterstop strip. The strength of the mortar shall be the same as the strength grade of the face concrete.

6.3.9.7 Necessary expansion joints shall be arranged for the toe-board of the rock foundation according to the topographic or geological conditions after excavation, and shall be staggered from the vertical joint of the face. The expansion joint will not be filled with the filler but the joint surface shall be brushed with a thin layer of asphalt emulsion or other anti-bonding material. One row of waterstop strips shall be arranged and form an enclosed waterstop system together with the water-stop strips for the peripheral joint and bedrock.

6.3.9.8 The expansion joints shall be arranged in the toe-board in the alluvial deposit and on the rock foundation with a geological flaw; the structure of the joints shall be the same as the structure of the expansion joint of the toe-board on the rock foundation.

6.3.9.9 In addition to the bottom copper waterstop strips, the joints between the wave wall and the face slab shall be filled with pre-plasticized flexible filler; when the elevation of this joint is higher than the normal reservoir level, the pre-plasticized flexible filler in the middle and lower parts of joints may be substituted with bituminized plank.

6.3.9.10 When the face slab is connected to the spillway or the side wall of another structure, the joints shall be designed as the peripheral joints and with the measures taken to reduce displacement of the rock-fill mass at the joint bottom.

6.3.9.11 If the face slab is to be concreted in stages, the construction joints shall be arranged if thus required in the construction technology or if any accident occurs during the concreting process.

6.3.10 Dam foundation excavation

6.3.10.1 The excavation face of the toe-board foundation shall be smooth, and be kept away from steep ridges and adverse slopes. When there are steep ridges and adverse slopes obstructing the rolling compaction of the cushion layer material, they shall be treated by slope cutting or concrete backfilling, or the position of the toe-board shall be re-adjusted.

6.3.10.2 The upstream side slope above the elevation of the toe-board shall be designed to be the permanent side slope.

6.3.10.3 When the downstream zone of the toe-board region is connected to the upslope excavation, its gradient shall be less than the gradient of the face; when it is connected to the downslope excavation, the gradient shall not be more than 1:0.5.

6.3.10.4 The rockfill dam body may be arranged on the weathered rock foundation, and the modulus of deformation shall not be less than the modulus of deformation of the rock-fill dam body. The rock-fill foundation within the scope of about 0.3 to 0.5 times the dam height on the downstream side of the toe-board should have relatively low compressibility. After excavation, the adverse slope or steep ridge with a gradient greater than 1:0.25 obstructing the rolling compaction of the rockfill is unacceptable; in other regions, the requirement for the compressibility of the foundation may be lowered, and it is only necessary to meet the stability requirement for an excavated slope after excavation.

6.3.10.5 When the bank slope of the river valley is very steep, the excavation gradient of both banks on the upstream side of the dam axis shall be specially determined together with the arrangement of the low compression area in the rockfill body.

6.3.10.6 The excavation of the sand-gravel layer of the dam foundation shall be determined through detailed exploitation, testing and demonstration.

6.3.11 Dam foundation treatment

6.3.11.1 If the bedrock within the scope of the toe-board is subject to unfavourable geological conditions such as a fault, fracture zone and weak intercalated layer, their influence on the dam foundation after seepage, seepage deformation and corrosion shall be studied in accordance with their occurrence, scale and composition materials so as to determine the allowable hydraulic gradient of the bedrock beneath the toe-board, the anti-seepage treatment and seepage control measures (such as concrete plug, cut-off wall, width increase of toe-board or downstream anti-seepage slab, as well as protection on the upstream and downstream sides with filter material).

6.3.11.2 The consolidation grouting and curtain grouting for bedrock beneath the toe-board shall be properly designed. Consolidation grouting shall adopt the blanket type, which shall be arranged in 2 to 4 rows with a depth of no less than 5m.

6.3.11.3 The curtain should be arranged in the middle of the toe-board, and can be combined with the consolidation grouting.

- The curtain grouting holes should usually be arranged in one row
- The curtain depth may be 5m in the region with a rock mass permeable rate of 3Lu-5Lu for a level-1 dam, level-2 dam and high dam, or 5m in the region with a rock mass permeable rate of 5Lu to 10Lu for the other dams, or determined as per (1/3 to 1/2) of the dam height

- The seepage control of the abutments on both banks shall be properly performed.

Under complex hydrogeological conditions, or when the burial depth of the relative confining bed is relatively deep, the impervious curtain shall be specially designed in combination with similar engineering experience.

6.3.11.4 In the grouting design, the special measures shall be specified to improve the durability of the grouted curtain and the grouting pressure at the bedrock on the surface layer, and be verified through grouting testing.

6.3.11.5 When the toe-board is arranged on the sand-gravel layer of the river bed, the concrete cut-off wall may be used for anti-seepage; the bottom of the cut-off wall shall be embedded into the slightly-weathered bedrock. The filter protection of the seepage escaping area as well as the connection between the toe-board and the cut-off wall shall be properly designed.

6.3.11.6 When the toe-board is arranged on the karst foundation, its anti-seepage treatment method is the same as the treatment method for the gravity dam foundation in the karst region, and the grouting gallery may be arranged on the toe-board.

6.3.12 Dam body calculation

6.3.12.1 When the concrete face rockfill dam has one of the cases below, the corresponding stability analysis shall be performed:

a) The weak intercalated layer exists in the dam foundation or there are fine-sand, silt or clay layers that exist in the sand-gravel layer of the dam foundation;

b) The peak ground acceleration is greater than or equal to 0.2g.

c) During the construction period, the water overflows the rockfill dam, or the rockfill dam body retains water or realizes flood protection with the cushion layer and temporary section, and the water retaining depth is relatively deep;

d) The dam body is mainly filled with soft rock materials;

e) The topographic conditions are unfavourable.

6.3.12.2 The Swedish circular arc method or sliding wedge method can be used to calculate the stability of face a rockfill dam. Value of safety factor for anti-sliding stability: normal operating conditions such as a stable seepage period and normal water level fall are no less than 1.15, and abnormal operating conditions such as construction period, normal operation and earthquake are not less than 1.05.

6.3.12.3 When the thickness of the toe-board is more than 2 m or the high-toe wall is adopted, the stabilitycalculation and stress analysis should be performed. The stability of the toe-board shall be calculated withthe rigid body limit equilibrium method. In the calculation, the action of the anchor bar of the toe-board andthe force transferring between the face and the toe-board will not be included, but the active earth pressureof rockfill on the toe-board may be included, or the lateral pressure applied to the face by the reservoir waterpressure may be included.

6.3.13 Seismic fortification measures

6.3.13.1 When the peak ground acceleration is greater than or equal to 0.2g, the following seismic fortification measures should be taken:

a) Adopt relatively a large dam crest width and a dam slope which is gentle on the upper part but is steep on the lower part, and arrange the bench at the position where the dam slope varies;

b) Improve the stability of the slope top by using horizontal reinforcement mesh;

c) Adopt a relatively low wave wall and take measures to improve the stability of the wave wall;

d) Take into account the additional settlement of the dam and foundation under the earthquake's action when determining the freeboard of the dam body;

e) Increase the compaction density of the rockfill material for the dam body, particularly the compaction density at the position with a sudden change in terrain;

f) Increase the width of the cushion layer area. When the bank slope is very steep, it is necessary to appropriately extend the length of the contact between the cushion layer material and bedrock and reduce the maximum grain size of the cushion layer material;

g) It is necessary to select several vertical joints in the middle part of the face, and fill the bituminized plank or other high-strength and compressible infill panel in the joints;

h) Increase the reinforcement ratio of the top face in the middle of the valley, particularly the reinforcement ratio on the slope face.

6.3.13.2 When filling the dam body with sand and gravel materials, it is necessary to increase the drainage capacity of the drainage area; press the downstream slope with big rock blocks or fill the downstream dam slope with rockfill material.

6.3.14 Staged construction

6.3.14.1 The stage filling of rock-fill dam shall be planned according to the following principles:

a) The cushion layer material and transitional material shall be filled up in synchrony with the rock-fill material for the adjacent part (at least 20m wide);

b) The connection gradient between rockfill materials shall not be more than 1:1.3, and the gradient of natural sandy gravel material shall not be more than 1:1.5;

c) The temporary ramp for dam material transportation may be arranged as required in the rockfill area;

d) When the rockfill dam body is used for flood prevention or the flooding flows over the dam face, the filling zones and stages shall be adaptive to the flood protection requirements.

6.3.14.2 When the elevation of the foundation surface of the toe-board is lower than the foundation elevation of the rock-fill dam body, the drainage measures shall be designed for the construction period of the rockfill dam body.

6.3.14.3 Before concrete face concreting, it is permissible to use the rock-fill dam body or temporary section for flood retention and protection, but it is necessary to meet the anti-sliding stability and seepage stability requirements.

6.3.14.4 When the rockfill dam is used for flood retention and protection, one of the measures such as rolling-compaction of low-strength mortar, shotcreting or spraying of cation emulsified asphalt shall be implemented on the upstream slope of the cushion layer area for slope reinforcement .

6.3.14.5 It is allowed for the water to flow over the rockfill dam body during the construction period if the slope surface has been protected.

6.3.14.6 When the water flows over the rockfill dam body, it shall be able to resist the scouring of water flow to the dam face and dam foundation, and ensure the stability of the dam body. In the design of the protective

measures for dam face overflowing, attention shall be paid to protecting the connections between the rockfill dam and both banks as well as the parts near the downstream dam toe.

6.4 Rolled earth-rock dam

6.4.1 General provisions

6.4.1.1 The dam site should be selected on bedrock with a simple geologic structure, or sand and gravel foundation with minimal thickness or dense soil foundation. The dam site should not be selected on the strongly permeable sand-gravel layer with wide thickness, in the karst developed region nor on the seriously weathered rock stratum, active fault zone and soft foundation; if unavoidable, the treatment measures shall be implemented.

6.4.1.2 With regard to the small rolled earth-rock dam, the types like the earth and rockfill dam with earth-based anti-seepage body, earth and rock-fill dam with artificial anti-seepage body and overflow earth and rockfill dam may be used

a) For the earth and rockfill dam, the earth-based anti-seepage body can be placed in the middle part of the dam body(i.e. the core earth-rockfill dam), and the remaining part of the dam body shall be filled with permeable materials (sand, sand-gravel material or rockfill material). In case the earth-based anti-seepage body locates on the upstream side of the dam body(i.e. the sloping core earth-rockfill dam), and then the remaining part of the dam body shall be filled with permeable materials (sand, sand-gravel material or rockfill material). The relatively thick sand-gravel layer or rockfill layer also may be arranged on the upstream side of the earth-based inclined wall.

b) The anti-seepage body of the earth and rockfill dam with artificial anti-seepage body may employ reinforced concrete, bituminous concrete and geomembrane; the remaining part of the dam body may be filled with sand-gravel material and rockfill material. The anti-seepage body may be located on the upstream surface, in the middle or in the middle-to-upstream part of the dam. When the peak ground acceleration is greater than or equal to 0.1g, the rigid core wall should not be adopted in the dam.

6.4.2 Dam construction material

6.4.2.1 The soil and rock materials for dam building shall be selected in accordance with the following principles:

a) The soil and rock materials for filling the dam body shall have the physical and mechanical properties adaptive to their intended use, and have relatively good long-term stability;

b) Under the premise of not influencing the engineering safety, the materials near the dam site and the materials excavated from the project structures should be used first;

c) Convenience for excavation and transportation.

6.4.2.2 The soil material with water-soluble salt content greater than 5%, or with organic content greater than 5%, dry clay, dispersive soil and soft clay should not be used to build the dam.

6.4.2.3 The anti-seepage bodies may be filled with cohesive soil and gravelly soil (including weathered rock material).

- The permeability coefficient after compaction should not be more than 1×10^{-5}mm/s for the homogeneous earth dam; and should not be more than 1×10^{-6}mm/s for the core wall, inclined wall and blanket.

- The anti-seepage bodies should be filled with soil material with a plasticity index IP=7-20; if soil material with a lower plasticity index is used, it is necessary to appropriately increase the thickness of the anti-seepage body and build the filter properly.
- The moisture content of the soil material should be close to the optimum moisture content; the soil should be appropriately treated if there is a significant difference.

6.4.2.4 With regard to gravelly soil (including weathered rock material) for the anti-seepage body, the content of particles with a grain size of more than 5 mm should not be more than 50%, the content of particles with agrain size smaller than 0.074 mm should not be more than 15%, the maximum grain size should not exceed150 mm or 2/3 of soil paving thickness, and the coarse grains shall not be concentrated.

6.4.2.5 If the natural impervious soil material is insufficient in local area, the cohesive soil, sandy soil and gravel-cobble, or mixture of cohesive soil and gravel-cobble may be used, but they shall be uniformly mixed.

6.4.2.6 When using the gravelly soil (including weathered rock material) or mineral admixture as the impervious material of dam, it is necessary to propose the grading scope of soil material through test.

6.4.2.7 The slope eluvial laterite or laterite-form soil with stable granular structure have high moisture content but low dry density, while the shear strength is relatively high, the permeability is relatively low and the compressibility is relatively low so that they could be used to fill the anti-seepage body of the earth and rockfill dam.

6.4.2.8 When the expansive soil is used to fill the anti-seepage body, a protective layer of sufficient weight shall be arranged.

6.4.2.9 If the collapsible loess is used for building the dam, its undisturbed structure shall be damaged, and the filling moisture content should be equal to or slightly greater than the optimum moisture content.

6.4.2.10 The frozen earth should not be used for building the dam. When frozen earth is used for building the dam, the content of the frozen earth blocks shall not be more than 10%; the diameter of the maximum frozen earth block shall not be more than 1/2 of the earth paving thickness; the moisture content of the frozen earth should be equal to or slightly less than the moisture content of the plastic limit.

6.4.2.11 The dam shell shall meet the dam body stability and drainage requirements.

- It should be filled with medium-coarse sand, sand gravel, rock ballast or rockfill material.
- The uniform medium-fine sand and silt may be used for the dry zone of dam shell.
- With regard to the soft-rock weathered material with relatively low strength, the gradation variation after compaction as well as the reduction of strength and water permeability after being immersed in water shall be considered, and such material should be used on the appropriate position of the dam shell.
- The rock materials with relatively high compressive strength and weather resistance should be selected for the upstream slope protection and drainage facilities.
- The ratio of the maximum edge length to minimum edge length of the rock block should not be more than 2.0; the diameter and weight of the rock materials shall be able to meet the requirements for wave resistance.

6.4.2.12 The medium-coarse sand, natural sand-gravel material or screened material should be used for the filter, cushion layer and transition layer of the dam; the rolled rock materials also may be used, and the grain composition shall be able to meet the anti-filtration drainage requirements. They shall be stable over the long

term and the silt content (d<0.1 mm) shall be less than 5%.

6.4.2.13 The geomembrane for anti-seepage and the geotextile for anti-filtration drainage in the earth and rockfill dam shall meet the physical and mechanical properties, hydraulic characteristics and durability adaptive to the engineering requirements. The anti-filtration drainage principle shall be met between them and the grain compositions of the protected soil.

6.4.3 Filling standards

6.4.3.1 The dam body shall be dense and uniform, have sufficient shear strength, relatively low compressibility and meet the seepage flow control requirement. The filling standards shall be reasonably specified to make the filled soil compaction meet the safety requirements and be economical and reasonable. In the construction process, the specified filling standards shall be checked and corrected.

6.4.3.2 With regard to the cohesive soil, the compacted dry density shall be determined as per the maximum dry density of the standard compaction test multiplied by the degree of compaction. The degree of compaction may be from 0.95 to 0.97. The moisture content of the filling soil shall be controlled as per the optimum moisture content and the allowable deviation shall be ±3%.

6.4.3.3 With regard to the gravelly soil, the compaction testing of the gross sample should be performed with large-scale compaction testing apparatus to obtain the maximum dry density and optimum moisture content for different coarse aggregate (d≥5 mm) content, and then the maximum dry density is multipliedby the degree of compaction from 0.95 to 0.97 so as to obtain the dry density for controlling the filling of thegravelly soil. When the conditions for large-scale compaction testing are unavailable, it may be determined inthe following two cases according to the different coarse aggregate contents:

a) With regard to the gravelly soil with a coarse aggregate content less than 40%, the portion of fine aggregate (d<5mm) may be taken for compaction testing to determine the maximum dry density and optimum moisture content of the fine aggregate; the maximum dry density and optimum moisture content of the gross sample of gravelly soil with different coarse aggregate content shall be worked out with the formulas (11) and (12), and are multiplied by the degree of compaction to obtain the filling standard for gravelly soil.

$$\gamma d_{max} = \frac{-1}{\frac{P}{\Delta s} + \frac{(1-P)}{(\gamma d)_0}} \quad \text{.....} (11)$$

$$\omega_{op} = \omega_0 (1-P) \quad \text{.....} (12)$$

where

$\gamma_{d\ max}$ is the maximum dry density of the gravelly soil, in gr/cm^3

P is the gravel content with grain size d>5 mm, calculated in decimals;is

Δs the gravity density with grain size d>5 mm, in gr/cm^3;

$(\gamma_d)_0$ is the maximum dry density of fine-grained soil with grain size d<5 mm, in gr/cm^3;

ω_{op} is the optimum moisture content of gravelly soil;

ω_0 is the Optimum moisture content of fine-grained soil with grain size d<5 mm.

b) With regard to the gravelly soil with a coarse aggregate content greater than 40%, it is necessary to correct the maximum dry density and optimum moisture content of the gross sample, or appropriately reduce the degree of compaction. The filling standards shall be determined on this basis.

6.4.3.4 The compaction standards for sand material and sand-gravel material should be controlled as per relative density (D_r) and the D_r is required to be ≥0.7. When the test data is insufficient, it may also be controlled with (γ_d); it is required that the sand material γ_d equals 1600 kg/m^3 to 1700 kg/m^3; when thegravel content of the sand-gravel material is from 40% to 70%, γ_d≥2000kg/m^3 according to different gravelcontents. The compaction standard for the rockfill material should be controlled as per the porosity (n) andit is required that n equals to20% to 28%.

6.4.4 Dam foundation treatment

6.4.4.1 The sand and gravel foundation treatment shall comply with the following principles:

a) The cut-off trench or blanket may be used for dam foundation anti-seepage, or the cut-off wall may be built with the high-pressure jet grouting technology; upon technical and economic comparison, the concrete cut-off wall also may be used. The downstream drainage facilities may include the horizontal drainage layer, drainage prism, drainage ditch at dam toe, relief well and permeable weighted blanket.

b) The cut-off trench with open backfill clay should be used when the sand and gravel overburden thickness is less than 15 m.

c) The cut-off trench should be laid out beneath the anti-seepage body. The cut-off trench for the homogeneous earth dam may be laid out within the lower 1/3 dam bottom width scope from the dam axis to the upstream dam toe.

d) The bottom width of cut-off trench shall be determined according to the permissible seepage gradient for the backfilled earth material.

    - The permissible seepage gradient shall be 3 for light loam, 3 to 5 for loam and 5 to 7 for clay.
    - The minimum bottom width shall not be less than 3.0 m.
    - The excavation slope for the cut-off trench shall be determined according to the shear strength of the covering material and the excavation depth, and may be 1:1.5 to 1:2.
    - The cut-off trench should be filled up with the same earth material as that of the anti-seepage body of the dam body, and its compacted dry density shall be the same as that of the anti-seepage body of the dam body. When the grading between the soil in the cut-off trench and the sand gravel of the dam foundation does not meet the inverted filter requirements, the inverted filter shall be arranged on the downstream surface of the cut-off trench.

e) The depth of cut-off trench embedded into the relative confining bed, impervious bed or weak-weathered rock (including river bed and both banks) shall not be less than 0.5 m. If the fractures are developedon the surface of bed rock, they may be stuffed with cement mortar, or one layer of concrete may belaid to separate the fractures from the filling material of dam body. The bed rocks may be grouted whennecessary.

f) If the dam foundation is on the stratum with the sand and gravel layer and aquitard interlaid, the permeability coefficient difference between the aquitard and the sand and gravel layer is more than 100, and they are relatively thick and continuous, the upper sand and gravel layer may be excavated through and the cut-off trench may be built on this aquitard.

g) If the sand and gravel overburden of the dam foundation is relatively thick, it is very difficult to excavate the cut-off trench and it is necessary to take vertical anti-seepage measures, the high-pressure jet grouting measure or the concrete cut-off wall may be implemented.

h) If the sand and gravel overburden of the dam foundation is relatively thick, the upstream blanketing measure plus the downstream anti-filtration drainage measure may be implemented.

i) For the blanket design, the reasonable length, thickness and permeability coefficient of the blanket shall be determined to control the seepage gradient and the seepage discharge for the dam foundation within the permissible range.

- The length of the blanket should not be less than 5 times the water head.
- The thickness of the upstream end of the blanket should be 0.5m to 1.0m, the thickness at the connection between its end and the anti-seepage body shall meet the requirement for seepage discharge for the dam foundation and the permissible seepage gradient for the blanket, but should not be less than 2.5m.
- The blanket shall be filled with cohesive soil with a permeability coefficient equal to or less than 1×10^{-5} mm/s.

j) The sludge and humus on the blanket foundation surface shall be cleaned thoroughly. It is necessary to excavate in the blanket foundation for sampling and to learn about its grain composition. The foundation surfaces shall be compacted and levelled, and shall be free from any gravel concentration. The anti-filtration principle shall be complied with between the earth material for the blanket and the sand and gravel for the dam foundation; otherwise, the inverted filter shall be arranged.

k) If using the natural soil layer as the blanket, it is necessary to learn about its distribution, thickness and permeability, and to determine its anti-seepage effects and whether it is necessary to arrange an additional artificial blanket or take other reinforcement measures. When the soil is borrowed from the area upstream of the dam, it shall be borrowed beyond the certain scope of the upstream dam toe.

l) If using geomembrane as blanket anti-seepage material, it is necessary to properly pave, bond and protect the geomembrane to prevent it from being damaged.

m) After blanketing, it is necessary to pave the loose soil or slag charge on the surface for protection. At the positions which may be scoured by the wave, it is necessary to pave the rock blocks on the blanket for protection.

n) If the dam foundation seepage can be controlled after the vertical anti-seepage measures are taken, the downstream drainage measures may be appropriately simplified, and the anti-filtration drainage ditch may be arranged at the dam toe. When blanket seepage is used, the drainage facilities including the horizontal drainage layer, the rock-fill drainage prism and anti-filtration drainage ditch may be arranged on the downstream side; and the relief well and the downstream permeable weighted blanket shall be arranged when necessary.

o) The bottom of all the drainage systems shall be arranged on the pervious foundation.

- If the surface of the dam foundation is the aquitard with narrow thickness, it is necessary to excavate through the aquitard;
- If the aquitard is very thick, it is allowable to construct the relief well into the pervious bed and lead the water to the drainage ditch at the downstream dam toe; the depth of the relief wall into the pervious bed shall not be less than 1/2 of the pervious bed thickness.

- The drainage ditch shall have sufficient drainage section, and the filter design shall be properly performed. The transverse (vertical to axis direction of the dam) drainage ditch shall be arranged to lead the infiltration water to the downstream area.

p) The anti-filtration drainage should be paved in the foundation scope in which the exit gradient on the downstream side of the dam is greater than the permissible value. When necessary, the permeable weighted blanket should also be paved, and the inverse filtering requirement shall be met between the permeable weighted blanket and the foundation.

6.4.4.2 The liquefiable soil and the soft soil foundation treatment shall meet the following principles:

a) The possibility of earthquake-induced liquefaction shall be considered for the saturated silt, fine, medium sand foundation as well as the less cohesive soil (such as saturated sandy loam soil, silty sandy loam soil, light loam and light silt loam) foundation in the earthquake region.

b) The soil layer which has been judged to be liquefiable should be excavated and replaced with soil material meeting the requirement. If it is difficult or not economical to excavate, it is necessary to take reinforcement measures to reach the dense state adaptive to the design seismic intensity. The reinforcement measures may include: shallow compaction, vibro-densification of the surface layer, the deep explosion method, the dynamic compaction method of the sand pile, vibrating and impacting reinforcement and dynamic consolidation.

c) The soft soil has small bearing capacity, high compressibility and low shear strength; if it is required to build the dam on the soft soil, it is necessary to treat the foundation; the treatment methods include sand replacement, suppression platform, sand well plus horizontal drainage blanket, vibrating and impacting reinforcement and bedding with geo-synthetics

d) When any of the treatment methods for the soft soil foundation is used, the filling speed of the dam body shall be controlled.

6.4.4.3 The treatment of the collapsible loess foundation shall meet the following principles:

a) With regard to the collapsible loess foundation which is not thick, its collapsibility may be eliminated by excavation, turning-pressing or surface compaction. Under the premise of ensuring the dam body stability, the soil layer which has relatively low surface dry density but relatively high collapsibility may be excavated, and the soil layer of the lower part shall be reserved.

b) When the collapsible loess of the dam foundation is relatively thick, the foundation should be treated with the pre-soaking method. When the thickness of the collapsible loess exceeds 15m, the pre-soaking process may be accelerated by drilling holes or a deep vertical shaft. The scope of the pre-soaking treatment shall be greater than the scope of the dam foundation, and be extended up to one time the value of the soaking depth both in the upstream and in the downstream sides of the dam foundation. The soaking treatment of the dam foundation shall be combined with the filling of the dam body to increase the weight and accelerate the water collapsibility.

c) When the dam foundation is collapsible loess, it also may be treated by the heavy tamping method; the number of times that tamping is done and its influencing depth shall be determined through testing.

d) When the collapsible loess foundation is treated with the vibro-flotation method, the spacing between holes, hole diameter and hole depth shall be determined with reference to experience from the built project or through the testing.

e) The underground cavity like sink hole, animal furrow, cave and burial pit in the dam foundation loess shall be ascertained and treated.

6.4.4.4 The rock and karst foundation treatment shall meet the following requirements:

a) When the water permeability of the rock foundation is relatively high, which influences the water filling as well as the safety of the dam body and dam foundation, the treatment measures shall be implemented.

b) When the intensive belt of the joint fissures or a fault fracture zone exists in the rock foundation within the scope of the dam foundation or cut-off trench, the corresponding treatment measures shall be determined according to their occurrence, width and depth as well as the influence of piping and corrosion on the dam foundation and dam body. The treatment measures include:

- Excavating a furrow and backfilling concrete;
- Increasing the bottom width of the cut-off trench;
- Paving the inverted filter at the exposed positions of the downstream fault and fracture zone;

c) When building a dam in the karst region, it is necessary to ascertain the hydrogeological conditions as well as the karst distribution situation both within the dam site as well as the surrounding areas.

d) The karst foundation may be treated by cutting, blocking, entrapping, paving and separating. Any one of the treatment methods or a combination of several methods may be used according to the engineering and seepage situation.

6.4.5 Connection of the dam body to the foundation and the bank slope

6.4.5.1 The filled earth of the dam body shall be properly combined with the foundation and the bank slope, and shall be free from the following cases:

a) The infiltration water scours along the contact surface between the dam body and the dam foundation;

b) The weak surface is formed and the dam body stability is influenced;

c) The differential settlement and cracks occur.

6.4.5.2 Before filling the dam body, it is necessary to clean the dam foundation and the bank slope according to the following requirements:

a) Clean the turf, tree roots, planting soil and stone riprap on the foundation and the bank slope within the scope of the dam section. Treat the water wells, caves, test pits and drilled holes;

b) It is necessary to remove the loose stones on the surface, the loose soil in the pits and the projecting rocks at the connections between the anti-seepage body of the earth and rockfill dam and the rock foundation/ bank slope; the anti-seepage body shall be in contact with the rock surface; if bedrock fissures have developed, the concrete cover plate shall be arranged or the cement mortar or concrete shall be sprayed on the contact surface between the bedrock and the anti-seepage body of the dam to separate the bedrock from the anti-seepage body; the bedrock shall be grouted when necessary.

6.4.5.3 The rock slope shall be as smooth as possible, but shall not be made into steps or have an adverse slope or sudden change in gradient; when the bank slope is gentle on the upper part and steep on the lower part, the multi-sloping angle of the projecting part should not be less than 20°. The gradient of the rock bank slope in contact with the anti-seepage body should not be greater than 1:0.5 and the gradient of the earth bank slope should not be greater than 1:1.5. The gradient of the contact surface between the anti-seepage body and the concrete structure should not be greater than 1:0.25. At the connection between the permeable material of the dam shell and the bank slope, the contact gradient will not be specially specified, but the bank slope shall ensure its own stability.

6.4.5.4 At the connection between the earth anti-seepage body and the bank slope, the section of the anti-seepage body or the thickness of the downstream inverted filter should be increased.

6.4.5.5 The anti-filtration requirement shall be met between the foundation overburden or the rock fissure filling of the bank slope and the filter dam shell; otherwise, the inverted filter should be arranged.

6.4.6 Dam body structure

6.4.6.1 The crest elevation of the earth and rockfill dam is determined by the normal water level or the verified flood level and the crest freeboard. The crest freeboard can be calculated according to the formula (9). When the wave wall is arranged on the upstream side of the dam crest, the top elevation of the wave wall shall be higher than the top elevation of the wave, and the dam crest shall not be lower than 0.5 m above theverified flood level or the normal reservoir level. In the earthquake area, the height of the earthquake surgecan be 0.5 m to 1.0 m according to the seismic intensity and the water depth in front of the dam.

6.4.6.2 The dam crest shall be reserved with a settlement margin, the value of which shall be determined by calculation or engineering analogy. The reserved settlement margin can be increased appropriately in the earthquake area.

6.4.6.3 The width of the dam crest shall meet the requirements for traffic, construction and operation and overhaul. The width of the dam crest may be 4 m to 6 m.

6.4.6.4 Flexible materials such as gravel, sand gravel or bituminous concrete can be used on the dam crest pavement. The dam crest pavement can be inclined by 2% to 3% towards the upstream and downstream sides respectively or only towards the downstream side. The downstream drainage system should be properly equipped.

6.4.6.5 The dam slope shall meet the stability requirements. The necessity of arranging benches on the upstream and downstream dam slopes may be determined according to the actual demands; its width shall not be less than 1.0 m; the height difference between benches may be 8m to 12 m.

6.4.6.6 The section size of the earth anti-seepage body shall meet the seepage stability requirements, and the seepage shall be controlled within the allowable scope.

6.4.6.7 The thickness of the earth anti-seepage body shall increase gradually from top to bottom, and the top width should not be less than 1.5 m; the bottom thickness may be determined according to the permissivepermeability gradient, but shall not be less than 3.0 m. In cold regions, the thickness of the protective soillayer of the clay core wall shall be greater than the local frozen soil depth.

6.4.6.8 If the geomembrane is used for anti-seepage, a protective layer shall be paved on the geomembrane, and a supporting layer beneath it. The protective layer consists of the surface layer and the cushion layer. The protective layer shall be able to prevent the geomembrane from ultraviolet radiation. The supporting layer shall make the stress of the geomembrane uniform and protect it from being damaged by the partial centralized stress.

6.4.6.9 The anti-seepage geomembrane shall form an enclosed anti-seepage system together with the dam foundation, bank slope or other concrete structures. The peripheral joints shall be properly treated, and their structural dimensions shall be able to meet the requirements for seepage gradient and deformation.

6.4.6.10 The top elevation of the anti-seepage body shall be at least 0.3 m higher than the normal water leveland shall not be lower than the verified flood water level; If the wave wall is arranged on the top of the anti-seepage body, its top elevation may not be limited by this paragraph, but shall not be lower than the normalwater level.

6.4.6.11 The anti-filtration principle shall be applied between the earth anti-seepage body (including homogeneous dam, core wall, inclined wall, blanket and cut-off trench) and the drainage body of the dam shell or the pervious bed of the dam foundation; otherwise, the inverted filter shall be arranged, or the inverted filter and the transition layer shall be arranged at the same time.

6.4.6.12 If the anti-filtration principle cannot be applied between the dam shell and the dam foundation, the inverted filter shall be arranged.

6.4.6.13 When the dam body is filled with several earth and rock-fill materials with different properties, the anti-filtration principle shall be applied between the different soil layers. The positions close to the core wall or the inclined wall should be filled with earth and stone materials with relatively low water permeability and relatively fine grain size; the positions close to the dam slope should be filled with earth and stone materials with relatively high water permeability and relatively coarse grain size.

6.4.6.14 The requirements for the inverted filter are as follows:

a) It shall be able to prevent the protected soil from seepage deformation; the material of the inverted filter shall be non-piping soil;

b) Its water permeability shall be greater than that of protected soil, and it can drain the infiltration water smoothly;

c) It shall not be clogged by the fine particles (d<0.1 mm);

d) It shall be durable and stable, and its properties will not change over time or under the influence of the environment during the service period.

6.4.6.15 The inverted filter and the transition layer shall be compacted. The thickness of the inverted filter shall be determined in accordance with the purposes of and construction methods for the materials. The minimum thickness per layer may be 0.3 m for the horizontal filtering layer and may be 0.4 m for the verticalor inclined inverted filter. When it is built with the machinery, the minimum horizontal width shall bedetermined according to the construction machinery and construction method. The thickness of the invertedfilter built on the soft soil foundation shall be increased appropriately.

6.4.6.16 The granular filter material shall be determined according to the following criterion:

a) The relationship between the protected soil and the inverted filter shall meet the requirements of $D_{15}/d_{85} \leq 5$ and $D_{15}/d_{15} \geq 5$. D_{15} means that the weight of soil less than the grain size of the filter material occupies 15% of the total weight of soil; d_{85} (d_{15}) means the grain size of protected soil and the weight of the soil less than the grain size of the protected soil is 85% (15%) of the total weight of the soil.

b) When the protected soil is fine-grained soil (CL and/CH) and d_{85}=0.01 mm to 0.03 mm, the sand or gravellysand $D_{15} \leq 0.5$ mm may be used as the inverted filter.

c) With regard to the protected soil with a relatively high non-uniform coefficient (η), d_{15} and d_{85} of the fine grain portions with η less than or equal to 5 to 8 in the grading curve may be used as the grain size.

d) With regard to the soil gap gradation, d_{15} and d_{85} of the grain group below the level section of the grading curve (usually less than 1 mm to 5 mm) shall be used as the grain size for calculation.

e) When the sand gravel with a non-uniform coefficient (η) greater than 5 to 8 is used as the filter material for the first layer, it is required that the gravel (d ≥ 5 mm) content should be 60%, and the D_{15} in its finematerial (d < 5 mm) portion shall be taken as the grain size for calculation.

6.4.7 Drainage in the dam body

6.4.7.1 The drainage facilities shall be arranged for the earth and rockfill dam, and shall meet the following requirements:

a) Lower the seepage line of the dam body, reduce the pore pressure, control seepage and improve dam body stability;

b) Have sufficient drainage capacity and freely drain all the infiltration water;

c) Design as per the anti-filtration principle to prevent the dam body and the foundation soil from seepage failure;

d) The materials for the drainage shall be rock blocks, macadam or sand-gravel material which are hard and weather-resistant.

6.4.7.2 The drainage facilities for the dam body include the drainage prism, slope face drainage, drainage in the dam body (including horizontal blanket drainage, vertical drainage and grid-form drainage) or a combination of the above measures.

6.4.7.3 The type selection of the drainage facilities for the dam body shall be determined in combination with the drainage requirements for the dam body and the dam foundation, and with comprehensive consideration given to the following situation:

a) The properties of the dam type as well as the materials of the dam body and the dam foundation;

b) The engineering geological and hydrogeological conditions of the dam foundation;

c) The downstream water level;

d) The material and construction situation of the drainage facilities;

e) The climatic conditions of the dam site area.

6.4.7.4 The requirements for the drainage prism are as follows:

a) The drainage prism applies to the situation that there is water in the downstream region; its top elevation shall be at least 0.5 m above the downstream maximum water level;

b) The minimum distance between the seepage line of the dam body and the dam face shall be greater than the depth of frost penetration in this region;

c) The top width of the drainage prism shall meet the requirements for construction and observation, which should not be less than 1.0 m;

d) The inner and outer slopes of the drainage prism may be determined according to the situation of the rock materials and construction; the gradient of the inner slope may be 1:1.0 and the gradient of the outer slope may be 1:1.5 or smaller.

6.4.7.5 The requirements for slope face drainage are as follows:

a) The top of the slope face drainage shall be higher than the exit point of the seepage line; the height difference shall make the seepage line of the dam body be below the frost line, but shall not be less than 1.5 m;

b) The thickness of the slope face drainage shall be greater than the depth of frost penetration.

6.4.7.6 The requirements for the horizontal blanket drainage are as follows:

a) The horizontal blanket drainage applies to the situation where there is no water in the downstream region;

b) The longitudinal open drain connected to it shall be arranged at the dam toe of the horizontal blanket drainage; the bottom of the open drain shall be lower than the bottom surface of the horizontal blanket drainage; in a cold region, sufficient drainage sections shall be ensured after the open drain has been frozen;

c) With regard to the homogeneous earth dam, the horizontal blanket drainage should usually be filled with medium-coarse sand or sand-gravel material; the sand-gravel material shall meet the anti-filtration requirements, and shall be free from gravel concentration phenomenon; the relatively big particles should be removed; the silt content (d < 0.1 mm) shall be less than 5% and the permeability coefficient shall begreater than that of the dam foundation and the dam body;

d) The thickness of the blanket may be determined on the basis of the draining twice the infiltration capacity; for the dam foundation prone to produce differential settlement, the thickness of the horizontal blanket drainage shall be increased;

e) The length of the horizontal blanket drainage extended into the dam body may be 1/3 to 1/4 of the dam bottom width;

f) On the dam foundation surfaces of both banks, the transverse spray drain shall also be arranged for the purpose of collecting the infiltration water in the blanket by sections and leading the water to the drainage ditch at the dam toe. The top surface of the spray drain shall be lower than the bottom surface of the blanket.

6.4.7.7 The vertical drainage may be arranged in the homogeneous earth dam body, and connected to the upstream end of the horizontal blanket drainage to retain the seepage in the dam and lower the seepage line.

6.4.7.8 The dimensions of the longitudinal and transverse drainage strips in the drainage grid shall be determined according to the seepage calculation; its drainage capacity shall not be less than twice the infiltration capacity. The width of the transverse drainage strip shall be more than 0.5 m, the spacing betweenstrips shall be 20m to 50 m and the gradient shall not be more than 1%. If the calculated dimensions of thedrainage grid are too great, the concrete drain pipe may be arranged in the drainage strips, the pipe wall shallbe drilled with holes and the pipe diameter shall not be less than 0.15 m. The flow velocity in the pipe shall be 0.2 m/s to 1.0 m/s; the filter material shall be filled around the pipe body.

6.4.8 Slope protection

6.4.8.1 The arrangement of the slope protection of the dam face shall meet the following requirements:

a) The upstream slope protection should resist wave impact and prevent damages by ice blocks and debris;

b) Frost heaving and seasoning cracking of the cohesive soil in the dam body shall be prevented;

c) The slope surface shall be protected from the rain wash;

d) The non-cohesive soil shall be protected from being blown away by the wind;

e) The destruction by animals shall be prevented.

6.4.8.2 The upstream slope may include riprap protection of the slope, placed rockfill protection of the slope, masonry protection of the slope, concrete or bituminous concrete protection of the slope.

6.4.8.3 The cushion layer shall be arranged between the dam body and the rockfill revetment.

6.4.8.4 The upstream slope protection may not be arranged in a position 1.5 m below the minimum reservoirwater level.

6.4.8.5 The downstream slope protection may include a grassed slope, macadam or cobble slope protection and a crushed rock (or concrete precast block) revetment. If the dam body is filled with rock, macadam or cobble, the slope protection may not be arranged.

6.4.8.6 In the cold region, the thickness of the upstream/downstream slope protection and the cushion layer for the soil mass shall not be less than the depth of frost penetration.

6.4.8.7 The longitudinal/transverse joints and drainage holes shall be arranged for the masonry or concrete protection slope.

6.4.8.8 The foundation support shall be arranged at the toe of the protection slope.

6.4.9 Drainage on the dam face

6.4.9.1 The longitudinal and transverse drainage ditches should be arranged on the downstream slope.

a) The longitudinal (along the direction of dam axis) drainage ditches should be arranged on the inner side of the bench.

b) The transverse drainage ditches shall be extended from the dam crest to the drainage ditch at the dam toe or below the minimum tailwater level.

c) The transverse drainage ditches may be arranged at intervals of 50 m to 100 m, and there shall be atleast two transverse drainage ditches. The longitudinal and transverse drainage ditches shall be inter-connected.

d) The net section size of the drainage ditch may be 0.4 m×0.3 m. The drainage ditch may be built withmasonry or concrete blocks.

6.4.9.2 The drainage ditch shall be arranged at the connection between the dam body and the bank slope; its water-collecting area shall include the effective water-collecting area of the bank slopes.

6.4.10 Calculation for the dam body

6.4.10.1 The seepage calculation for an earth and rockfill dam shall include the following contents:

a) Determine the location of the dam infiltration line and its downstream escape point, and draw the distribution map or flow network map of the isopotential lines within the dam body and the foundation.

b) Determine the seepage flow for the dam body and foundation;

c) Determine the escape gradient between the dam slope escape section and the downstream dam foundation surface, as well as the seepage gradient between different soil layers;

d) Determine the position of the infiltration line or the pore pressure in the upstream dam slope when the reservoir water level falls;

e) Determine the isopotential line, seepage flow rate and seepage gradient of the abutment.

6.4.10.2 The calculation of seepage shall take into account all kinds of adverse conditions in the operation of the reservoir, including the following water level combinations:

a) The normal upstream storage water level and the corresponding lowest downstream water level;

b) Upstream designed flood level and the downstream corresponding water level;

c) Upstream checked flood level and the downstream corresponding water level;

d) The most unfavourable condition for upstream dam slope stability when the reservoir water level falls.

6.4.10.3 Anisotropy of permeability coefficient of the dam body and foundation shall be considered in seepage calculation. The average value of the high value of the soil permeability coefficient shall be used to calculate the seepage flow, and the average value of the high value shall be used to calculate the infiltration line when the water level falls. Necessary seepage control measures shall be taken through seepage calculation.

6.4.10.4 The stability of the earth-rock dam shall be calculated in the following four situations:

a) The downstream dam slope during the stable seepage period;

b) Upstream dam slope during the reservoir water level falling period;

c) Upstream and downstream dam slopes during the construction period (including the completion period);

d) Normal operation of the upstream and downstream dam slopes in case of earthquakes.

Where, a) and b) operating conditions are normal, and the anti-sliding stability safety factor is not less than 1.25; c) the operating condition is the abnormal operating condition I, and the anti-sliding stability safety factor is not less than 1.15; d) the operating condition is abnormal operating condition II, and the anti-sliding stability safety factor is not less than 1.10.

6.4.10.5 The static stability of the dam shall be calculated with the Swedish circle method in accordance with the rigid body limit equilibrium theory for the homogeneous dam, the core wall dam and thick earth dam with inclined core; or with the sliding wedge method for the thin earth dam with inclined core, thin core wall dam and dam body with soft soil interlining in the dam foundation.

6.4.10.6 The stability of the earth and rock-fill dam during the construction period may be calculated with the total stress method; the sample with the design dry density and moisture content equivalent to the filling shall be prepared for direct quick shear (or tri-axial undrained shear) testing; the strength index C_u and φ_u shall be used to calculate the stability. The stress acting on the slip arc shall be the total stress generated by the dead weight of the soil mass.

6.4.10.7 With regard to the dam on a collapsible loess foundation, the influence of strength reduction on the dam body stability after the foundation is immersed in water when the reservoir is filled shall be checked if the foundation has not been treated during construction.

6.4.10.8 With regard to the dam on soft soil foundation, the stability during the construction period shall be verified if the foundation has not been treated. The strength index C_u from the direct quick shear (or tri-axial undrained shear) test at natural dry density and the moisture content of the foundation soil may be adopted, or the strength index from the unconfined compression test or cross plate shear test may be adopted. If the drainage consolidation measures have been implemented for the foundation, the consolidation of the foundation at various degrees during the construction period and the completion time shall be considered; if the pore pressure is dissipated, the calculation may be performed with the effective stress method; in this case, the strength index from the direct quick shear (or tri-axial drained shear) test may be used.

6.4.10.9 In the steady seepage period, the calculation shall be performed with the effective stress method to work out the pore pressure and effective stress acting on the sliding surface according to the seepage flow net equipotential line; the direct slow shear (or tri-axial drained shear) strength index is used. To simplify the testing, the shear strength also may employ the direct consolidation quick shear strength index approximately.

6.4.10.10 During the water level drop period, the seepage line in the dam body may be deemed to drop synchronously along with the reservoir water level and the pore pressure will not be included for the non-cohesive soil such as rock material or sand-gravel material.

6.4.10.11 With regard to the soil anti-seepage body, when the water level drops, the pore pressure in the dam body or dam foundation during the water level drop period may be obtained in accordance with the flow net diagram after the water level drops and may be calculated with the effective stress method; the pore pressure also may be calculated with the following simplified method: Assuming that the seepage line remains unchanged before and after the water level drops; calculate the block in the part below the water level before it drops with the buoyant unit weight, calculate the sliding force with the saturated weight for the block between the dropped water level and the seepage line, calculate the sliding resistance force with the buoyant unit weight, use the true weight for the blocks in the part above the seepage line; the shear strength employs the direct solidification quick shear (or tri-axial consolidation undrained shear) strength index.

6.4.10.12 For the earth and rockfill dam, the total settlement of the dam body and dam foundation as well as the settlement during the construction period shall be calculated. The total settlement may be calculated layer by layer in accordance with the compression curve of the dam body and dam foundation, and then summarized.

$$S = \sum_{i=1}^{n} \frac{e_{0i} - e_i}{1 - e_{0i}} h_i \quad (13)$$

where

S is the total settlement, in m;

n is the number of layers;

e_{0i} is the nitial porosity at layer i;

e_i is the porosity at layer i under the effect of upper load;

h_i is the soil thickness at layer i, in m.

6.4.10.13 According to the empirical data, the settlement of the dam body during the construction period may be 80% of the final settlement for the earth dam and may be 90% of the final settlement for rockfill or gravel dams. The result for total settlement deducted for the settlement during the construction period is the settlement after completion.

6.5 Dam with hydraulic automatic flap gate

6.5.1 General provisions

6.5.1.1 The type selection for the hydraulic automatic flap gate shall meet the requirements for comprehensive water use and flood discharge. Usually, the wheeled hydraulic automatic flap gate with connecting rod and the hydraulic automatic flap gate with double supports (see Figure 4 and Figure 5) should be used; the gate height should not be more than 5m.

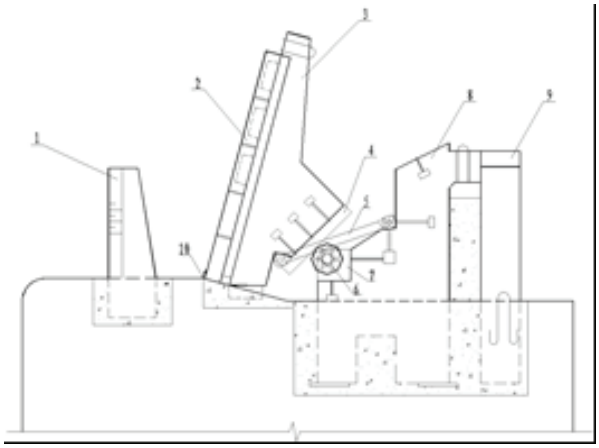

Key

1	protective pier	2	face
3	outrigger	4	rail
5	connecting rod	6	idler wheel (or fixed wheel)
7	wheel seat	8	buttress
9	service bridge	10	bottom waterstop

Figure 4 - Structure scheme of wheeled hydraulic automatic flap gate with connecting rod

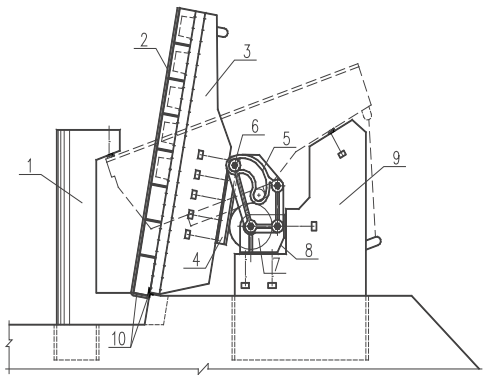

Key

1	limiting pier	2	face
3	outrigger	4	straight rail
5	guide rail	6	movable block
7	crown block	8	wheel seat
9	buttress	10	waterstop

Figure 5 - Structure scheme of wheeled hydraulic automatic flap gate with double supports

6.5.1.2 The flap gate shall be used for water storage projects on medium and small rivers in mountainous and hilly areas. The flap gate shall not be used for flood control and drainage control projects.

6.5.1.3 If the water depth upstream of the weir in front of the sluice is more than twice the gate height when discharging the flood, the flap gate should not be selected.

6.5.1.4 When the flap gate is arranged in the plain river channel and the river reach jacked with the downstream water level, the hydraulic model test shall be performed for demonstration.

6.5.1.5 The flap gate shall not sustain the static pressure of ice. When the flap gate is adopted in cold areas, the anti-freezing measures such as hydraulic jetting and frothing with compressed air shall be selected according to the air temperature and the reservoir water level changes.

6.5.1.6 With regard to the river channel requiring automatic control for operation management, the hydraulic-assisted flap gate should be selected.

6.5.1.7 For the project for a dam with flap gate, the regulating gate or scouring sluice shall be arranged according to the topographic conditions of the river bed.

6.5.2 Layout of the dam with flap gate

6.5.2.1 The dam with flap gate site shall be selected for the benefit of the project's general engineering layout; the river channel of the river reach selected should be smooth and straight and the water flow should be smooth and steady. The flap gate laid out on the river reach with complex flow regime or the flap gate with a discharging capacity exceeding 1 000 m^3/s shall be demonstrated through hydraulic model testing.

6.5.2.2 When the dam is built on the downstream river channel at the confluence of several rivers, the gate site should be selected at the position with smooth and steady flow conditions downstream of the confluence.

6.5.2.3 The axis of the flap gate shall be vertical to the water flow direction of the river reach; the total width of the gate shall meet the discharge design and verified flood requirements.

6.5.2.4 The connection of the flap gate with both banks shall make the water flow smoothly through the gate. The connection between the upstream/downstream wing walls and both ends of the bank pier shall be smooth; the length along the water flow direction shall be determined according to the inlet/outlet water flow conditions and the anti-scour requirements.

6.5.3 Construction of the flap gate

6.5.3.1 The flap gate weir should employ the broad-crested weir or trapezoid practical weir. The weir crest elevation shall be determined in accordance with the terrain, geology, water level, flow rate, sediment, construction and overhaul conditions, and should be 0.5 m higher than the average elevation of the upstreambed; the weir crest width shall meet the installation and overhaul requirements for the flap gate.

6.5.3.2 The fractional length of the gate base slab shall be coordinated with the span of the flap gate; the joints on the base slab should be laid out on the joints of the flap gate. The sectional length of the gate base slab on the rock foundation should not exceed 20 m; the sectional length of the gate base slab on the soil foundationshould not exceed 35 m.

6.5.3.3 When the general width of the flap gate is more than 50 m, the dividing piers should be arranged inthe middle part to separate the flap gate into several parts; the number of flap gates in the parts should be 5to 8. The distance extended upstream from the end of the dividing pier to the leading edge of the face shallnot be less than 3 m.

6.5.3.4 The protection piers may be arranged in front of the flap gate face slab; the fixed structure of the pulling anchor for flap gate maintenance shall be buried in the base slab or buttress behind the gate. The maintenance access should be arranged behind the buttress of the flap gate, and the width should be 0.6 m.

6.5.3.5 The dedicated pipe ditch should be arranged in the buttress and base slab of the hydraulic-assisted flap gate; the reserved pipe ditch dimension shall meet the requirements for installation of the connection between the hydraulic cylinder and the oil pipe, as well as for the second phase concrete covering thickness.

6.5.3.6 The hydraulic pump station and the electrical equipment for the hydraulic control system shall be laid out in the control room. Necessary space for equipment installation and maintenance as well as a passage with a width not less than 0.8 m shall be reserved in the control room. Dust, moisture, salt mist, frost and sandprevention measures shall be implemented for the electrical equipment.

6.5.4 Design of the flap gate

6.5.4.1 The water depth for opening the flap gate should be 0.1 m to 0.25 m deeper than the gate top, the waterdepth for closing the gate upstream of the weir should not be less than 0.9 times the vertical gate height andthe maximum flapping angle of the flap gate should not be more than 80°.

6.5.4.2 The flap gate should be of precast reinforced concrete construction; the fabrication members should include the face-plate, outrigger and buttress, and shall meet the strength, anti-cracking and durability requirements.

6.5.4.3 The gate face-plate shall be of double-cantilever-beam construction, and supported with double outriggers (longitudinal beams). The height of gravity centre of the flap gate body should not be more than 0.45 times the gate body height.

6.5.4.4 The buttress shall be of reinforced concrete structure. The bottom of the precast buttress shall be inserted into the foundation cup; the insert depth shall not be less than twice the length of the short edge.

6.5.4.5 The vent holes shall be arranged in the gate pier of the flap gate for supplying air beneath the gate. The bottom of the vent hole should be laid out at the position 1/3 of the gate height behind the gate. The top elevation of the vent hole shall be determined according to the verified flood level plus the safety marginal height.

6.5.4.6 The idler wheel should be made of cast iron or cast steel, the connecting rod should be made of structural steel, the rails should be made of rail steel or cast steel, the main shaft should be made of #45 steel, the wheel seat should be made of sheet material or cast steel and the guide rail plate should be made of nodular cast iron; the steel members shall meet the structural strength requirements.

6.5.4.7 For the weir body of the flap gate, the anti-sliding stability, structural stress, stability against seepage flow and energy dissipation and anti-scour shall be calculated; meanwhile, the influence of energy dissipation under unfavourable working conditions like centralized effluent due to gate jamming and overhaul shall be considered.

6.5.5 Calculation of the flap gate discharge

6.5.5.1 The hydraulic automatic flap gate can be opened, closed and backed off automatically by virtue of the hydraulic power and dead weight of the gate. The main design operation indexes for the flap gate shall meet the following requirements:

a) When there is no special requirement for the priming level of the gate, the water level shall be 0.1 m to 0.25 m above the gate top when the gate is closed.

b) The dip angle of the face-plate after the gate is fully turned may be determined according to the fixed weir height, the river channel gradient and the backwater effect, and shall be 75° to 80°.

c) The arm of force for backing off the gate shall be 0.08 m to 0.16 m.

6.5.5.2 The flap gate is discharging water in a combined mode consisting of flow from the weir above the gate and flow through holes below the gate. The water discharge through the flap gate may be calculated according to the weir flow formula (14) to (17).

$$Q = mcB\sqrt{2g}H_0^{1.5} \quad \text{(14)}$$

$$c = -0.560\left(\frac{S_1}{S_2}\right)^2 + 1.554\left(\frac{S_1}{S_2}\right) - 0.041 \quad \text{(15)}$$

$$S_1 = B \times (H_2 - H \times \cos\alpha) \quad \text{(16)}$$

$$S_2 = H_2 \times B \quad \text{(17)}$$

When the water flow is discharged freely through the holes in the flap gate weir, the coefficient m of water discharge through the gate and the correction factor c may be calculated according to the formulas (18) to (19).

a) For the broad-crested weir with circular-bead inlet edge:

When $0 < H_1/H_2 < 3.0$

$$m = 0.32 + 0.01\frac{3 - H_1/H_2}{0.46 + 0.75H_1/H_2} \quad \text{(18)}$$

When $H_1/H_2 \geq 3.0$, m=0.32

b) For the broad-crested weir with right-angled inlet edge:

When $0 < H_1/H_2 < 3.0$,

$$m = 0.36 + 0.01\frac{3 - H_1/H_2}{1.2 + 1.5H_1/H_2} \quad \text{(19)}$$

When $H_1/H_2 \geq 3.0$, m=0.36

where

Q is the water discharge through gate, in m^3/s;

m is the discharge coefficient for broad-crested weir;

c is the correction factor; with consideration given to the influence of the water blocking by the face-plate and the buttress as well as the side contraction;

S_1 is the open area when the water is blocked by the gate leaf, in in m^2;

S_2 is the open area above the weir crest at same water level when the water is not blocked by the gate leaf, in in m^2;

B is the width of the passing flow, in m;

g is the acceleration of gravity, in 9.81m/s^2;

H_0 is the water head including the approaching velocity, in m;

H_1 is the weir height, in m;

H_2 is the water depth over the Weir, in m;

H is the height of the gate, in m;

α is the overturning gate angle in the vertical direction, in (°).

7 Release structure

7.1 Spillway

7.1.1 General provisions

7.1.1.1 The layout of the riverside overflow spillway may include the intake channel, control section, discharge chute, energy dissipation and anti-scour facilities and outlet channel.

7.1.1.2 The layout of the spillway shall be comprehensively considered in combination with the general layout of the project to prevent mutual interference between the flood discharge and power generation structures in the layout.

7.1.1.3 For layout of the spillway, the layout and type of flood discharge and energy dissipation shall be reasonably selected, the water flow at the exit shall be smoothly connected to the downstream river channel to avoid serious erosion and scouring of the downstream river bed and bank slopes on the dam site by the discharge water flow, and the sedimentation of the river channel, and to ensure the normal operation of the other structures of the project.

7.1.1.4 The spillway shall be located on the bank or bealock with favourable topographical and geological conditions, and the high slope formed due to excavation should be avoided.

7.1.1.5 When the gradient of the dam abutments on both banks is high and the layout requires relatively a broad width of overflow leading edge, the side-channel inlet or other types of inlets may be adopted.

7.1.1.6 The spillway shall be laid out on the stable foundation, and sufficient attention shall be paid to the negative influence of the changes in hydrogeological conditions after the completion of the reservoir on the stability of the structures and side slopes.

7.1.1.7 The spillway inlet and outlet shall be laid out to ensure smooth water flow. The axis of the spillway should be straight; when it is necessary to make a turn, the bend should be arranged in the intake channel or the outlet channel section.

7.1.1.8 When the spillway is laid out near the dam abutment, its layout and discharge shall not influence the stability of the dam abutments and bank slopes.

7.1.1.9 The emergency power supply shall be provided for the gate hoist and the basic pumping appliance for the spillway to ensure reliable power supply.

7.1.1.10 When equipped with both the normal spillway and the emergency spillway, the flood discharge capacity of the normal spillway should not be less than the value required under the design flood standard.

Open spillway should be used for the emergency spillway. The maximum total discharge of the emergency spillway should not exceed the natural flood at the same frequency at the dam site.

7.1.2 Layout of the spillway

7.1.2.1 The layout of the intake channel shall comply with the following principles:

a) Favourable geological and topographical conditions shall be selected;

b) The axis direction shall be selected to ensure smooth water inflow;

c) When the intake channel is relatively long, the transition section shall be arranged before the control section, and its length shall be determined according to the flow velocity but should not be less than twice the water depth in front of the weir;

d) When the channel needs to make a turn, the turning radius of the axis should not be less than 4 times the channel bottom width, and the straight section between the bend and the control weir (gate) should not be less than twice the weir head.

7.1.2.2 The inlet of the intake channel shall be laid out according to the local conditions so as to make the water flow enter the channel smoothly and the shape of the inlet should be simple. When the inlet is laid out on the dam abutment, the guide wall with curved surface in the water flow direction shall be arranged on the side close to the dam; the side close to the hill may be excavated or lined into the regular curved surface. When the inlet is laid out on the bealock facing the reservoir, it should be laid out in symmetrical or basically symmetrical bell-mouth form.

7.1.2.3 When the bottom width of the intake channel shrinks in the water flow direction, the ratio of bottom widths at the headwork and at the tail end of intake channel should be 1.5 to 3, the bottom width should be equal to the overflow leading edge at the connection with the control section and the base slab should be flat or have a small adverse slope.

7.1.2.4 The bottom of the intake channel on bedrock may not be lined; when the head loss is relatively great or the non-scouring velocity requirement cannot be met, the necessity for lining shall be determined through economic comparison. When the lithology is poor, the bottom shall be lined.

7.1.2.5 The curvature radius of the arc on the plane of the vertical guide wall for the intake channel should not be less than twice the channel bottom width, the length of the guide wall in the water flow direction should be more than twice the water depth in front of the weir and the elevation of the guide wall crest shall be higher than the maximum reservoir water level when the flooding is discharged.

With regard to the intake channel close to the earth and rockfill dam body, the guide wall shall be at least long enough to block the slope toe of the dam.

With regard to the guide wall within the distance of twice the water depth in front of the weir to the control section, the wall crown shall be higher than the maximum reservoir water level when the flooding is discharged.

With regard to the guide wall beyond that distance, it may be arranged in a submergence type, and its wall crown shall be appropriately higher than the dam face.

7.1.2.6 The design of the control section shall include the weir (gate) controlling the discharging capacity and the connecting structures on both sides. The selection of the control weir (gate) axis shall meet the following requirements:

a) The general layout requirements for the intake channel, discharge chute, energy dissipation and anti-scour facilities and the outlet channel shall be comprehensively considered.

b) The requirements of the structures for strength, stability, anti-permeability and durability of foundation shall be met.

c) It shall assist the layout of external traffic and the structures on both sides.

d) When the control weir (gate) is close to the dam abutment, it shall be coordinated with the layout of the dam.

e) It shall assist the layout of the anti-seepage system; the anti-seepage drainage system including the waterstop for weir (gate) and both banks (or dam) shall form an integral system.

7.1.2.7 The control weir type shall be selected through comprehensive technical and economic comparison in accordance with the topographical and geological conditions, hydraulic conditions and operational requirements. The practical weir, broad-crested weir and hump weir should be applied both in open type and with breast wall. The open overflow weir should be selected in preference for its relatively large excessive discharging capacity. The necessity of arranging the gate on the weir crest shall be determined through demonstration from the aspects of engineering safety, flood regulation, reservoir operation and project investment.

7.1.2.8 The side weir for the side-channel spillway may employ the practical weir with no gate arranged on the weir crest. The cross-section of the side channel should be a narrow-deep trapezoidal cross-section; the side slope close to the hill may be determined according to the characteristics of the bedrock and the side slope close to the weir may be 1:0.5 to 1:0.9.

7.1.2.9 The type and dimension of the gate pier shall meet the requirements for the layout of the gate (including gate slot), the access bridge and the service bridge, as well as the water flow conditions, structure, operational and overhaul requirements.

7.1.2.10 The layout of the service bridge and the access bridge for the control weir (gate) shall be determined according to the requirements for the gate hoist, operation, observation, overhaul and traffic. If the bridges might be used for flood prevention and emergency rescue, the service bridge and the access bridge shall be arranged separately, and the clearance under the bridge shall meet the requirements for discharging flooding, ice and debris.

7.1.2.11 The top elevation of the gate pier, breast wall or quay wall in the control section shall not be less than the verified flood level plus the safety margin height when the verified flood is discharged; and shall not be less than the design flood level or the normal reservoir level plus the calculated height of the wave and the corresponding safety margin height. In the case that the spillway is close to the dam abutment, the top elevation of the control section shall be consistent with the dam crest elevation.

7.1.2.12 The layout of the longitudinal gradient, the plane and the cross-section of the discharge chute shall be determined through economic and technical comparison in accordance with the topographical and geological conditions and the hydraulic condition. When the discharge chute has a bend on the plane, the following requirements shall be met:

a) The flow velocity distribution shall be uniform in the cross-section.

b) The disturbance influence of a shock wave on the flow shall be small.

c) The gentle transition section may be arranged between the straight section and the bend section.

d) To lower the side wall height and adjust the water flow, the transverse gradient should be arranged at the channel bottom in the bend and the gentle transition sections.

e) The radius of the bend with the rectangular cross-section should be 6 to10 times the discharge chute width; with regard to the discharge chute with a large discharging capacity and high flow velocity, the parameters of the bend should be determined through the hydraulic model test.

f) The longitudinal gradient of the discharge chute should be more than the critical slope of the water flow; when the gradient needs to change due to the restrictions, the longitudinal gradient should not change too much, and should change from gentle to steep.

g) The discharge chute should employ a rectangular cross-section. When the trapezoidal cross-section is used in combination with the rock excavation, the gradient of the side slope should not be less than 1:1.5, and attention shall be paid to the uneven flow velocity caused thereby.

7.1.2.13 The type of energy dissipation and anti-scour facilities for the spillway shall be selected through technical and economic comparison in accordance with the topographical and geological conditions, discharge condition, operation mode, downstream water depth, anti-scour capacity of the river bed, energy dissipation and anti-scour requirements, connection to downstream water flow and influence on other structures. The riverside overflow spillway may employ the energy dissipation by trajectory jet scheme or the energy dissipation by underflow scheme, and the face flow, bucket flow or other energy dissipation schemes may be adopted as well.

7.1.2.14 The energy dissipation by the trajectory jet scheme may be used for projects on rock foundation with high or medium water heads; the flip trajectory bucket facility for the spillway may employ the equivalent width type, diffusion type or contraction type. The flip buckets may be continuous, differential or of abnormal shapes. When energy dissipation by trajectory jet scheme is used, the influences of the atomization of jet flow and the mud mist of the overloaded river on the safety and normal operation of other structures of the project and the bank slopes shall be prudently considered. In the following cases, the proper measures shall be implemented for treatment:

a) The weak structural surface with the low-angle dip and fault fracture zones extending to the downstream area exist in the foundation, and may be cut off by the scouring pit, which will imperil the safety of the structures.

b) The bank slopes may be destroyed by floods, the stability of dam abutment may be imperilled or the outlet channel or downstream river channel may be clogged.

c) The downstream surge and backflow imperil the safety and normal operation of the dam and other structures.

7.1.2.15 The energy dissipation by hydraulic jump scheme may be used for all kinds of foundations or the project with strict requirements for flow regime. The energy dissipation facilities by underflow may include stilling basins with a flat bottom or slope, diffusion-type distilling basin and contraction-type distilling basin as well as all kinds of auxiliary energy dissipaters. When necessary, the multi-stage stilling basin may be arranged, and attention shall be paid to the sediment abrasion problem.

7.1.2.16 The scheme of energy dissipation by the surface current may be used for the project where the downstream tailwater level is higher than the water depth after the jump and the water level variation is not great, and the river bed and both banks have relatively high anti-scour capacity within a certain scope, or it is required to discharge ice.

7.1.2.17 The bucket or bucket-type energy dissipater may be used for the project where the downstream water depth is greater than the water depth after the jump, the downstream river bed and both banks have a certain anti-scour capacity, but it should not be used when it is required to discharge debris. The dividing wall should be arranged on the downstream side of the bucket.

7.1.2.18 When the water discharged from the spillway could not be directly discharged into the river channel after energy dissipation and causes damages, the outlet channel shall be arranged. The selection of the outlet channel route shall be economical and reasonable, and its axis direction shall conform to the downstream river regime. The width of the outlet channel shall prevent the water flow from concentrating excessively, and avoid the harmful scour of the refractive flow on the river banks.

7.1.3 Hydraulic design

7.1.3.1 The hydraulic design for the spillway should include the calculation of the discharge capacity, the shape design of the flow boundary, the calculation of the water surface profile and the hydraulic grade line, the hydraulic calculation of the bend, the hydraulic calculation of the energy dissipation and anti-scour and the cavitation resistance design for the high-speed flow area. The hydraulic design of the spillway shall meet the following requirements:

a) The discharge capacity shall satisfy the discharge flow required under the design and check conditions.

b) The shape shall be reasonable and simple, the water flow shall be smooth and stable, and cavitation shall be avoided.

c) The discharged water flow regime and the water flow shall meet the sluicing requirement for the river bed.

7.1.3.2 The hydraulic design of the inlet channel shall be performed so that the water flow in the channel shall be smooth and stable, the water level fluctuation and the transverse water surface gradient shall be slight and the backflow and vortex shall be avoided.

7.1.3.3 The design discharge velocity in the inlet channel shall be more than the non-silting velocity of the suspended load but less than the non-scouring velocity of the channel, and the head loss shall be relatively small. The design discharge velocity of the channel should be 3 m/s to 5 m/s.

7.1.3.4 The channel water surface curve may be calculated with the stepwise summation process method in accordance with the energy equation established on the basis of the control section from the head of the diversion channel to the 3 to 5 times the weir head in front of the weir.

7.1.3.5 With regard to open-type practical weirs (including forward weir and side weir), the downstream weir surface of the weir crest should be calculated according to WES type power curve, and the upstream weir head of the weir crest should be calculated by using biarc, tri-arc or elliptical curves.

7.1.3.6 When the low practical weir is selected, the upstream weir height should be $P1 \geq 0.3\ H_d$ and the downstream weir height should be $P2 \geq 0.6\ H_d$, where H_d refers to the established design head of the weir surface curve. The weir surface curve is subsequently connected to a straight section, and the gradient should be greater than 1:1.

7.1.3.7 When the ratio of the maximum head above the weir crest to the orifice height $H_{max}/D>2$, or the gate is fully opened but water discharge is still regarded as orifice discharge, the curve of the weir surface downstream of the orifice should employ the parabola form. The bottom edge of the breast wall may employ the ellipse, arc or other types.

7.1.3.8 With regard to the low weir with the weir height less than 3m, the broad-crested weir or the hump weir may be adopted.

7.1.3.9 The weir surface pressure near the practical weir crest shall comply with the following provisions:

a) The negative pressure shall not occur on the weir surface when the gate is fully opened for frequent flooding.

b) The negative pressure value near the weir crest shall not be more than 0.03 MPa when the gate is fullyopened for design flooding.

c) The negative pressure value near the weir crest shall not be more than 0.06 MPa when the gate is fullyopened for verified flood.

7.1.3.10 The radius R of the anti-arc connected between the end of the practical weir and the discharge chute may be 3 to 6 times the maximum water depth at the lowest point of the anti-arc, and the high value is selected when the flow velocity is high.

7.1.3.11 The water surface profile of the discharge chute section shall be calculated with the stepwise summation process method in accordance with the energy equation. In the calculation, the initial calculation section and its water depth shall be properly determined.

7.1.3.12 When the water flow from the discharge chute is aerated, the water depth after flow aeration shall be taken into account.

7.1.3.13 When the contraction section is laid out in the discharge chute section, the shock wave calculation may not be conducted if the angle of throat is less than 6°. Otherwise, the shock wave of rapid flow shall be verified.

7.1.3.14 When the discharge chute contains the bend on the plane, the transverse water level difference on the bend section shall be calculated.

7.1.3.15 The hydraulic design of the side channel section in the side-channel spillway shall meet the following requirements:

a) The bottom slope i of the side channel shall employ the single slope, and shall be smaller than the critical slope i_{ke} calculated according to the critical water depth h_{ke} at the tail end section of the side channel. When the design flow is drained, the flow in the channel shall be slow.

b) The height h_s of the water depth at the head end section of the side channel above the weir crest shall be less than half of the weir head H_o so that the discharge in the side channel is not submerged.

c) The ratio of the bottom width at the head and tail end sections of the side channel, b_u/b_e, may be 0.5 to 1.0.

d) The hydraulic jump shall not occur in the side channel nor at the channel end section; the adjustment section should be arranged at the end of the channel, but should not be adjacent to the contraction section or the bend section. The length of the adjustment section L2 may be (2 to 3)h_{ke} and the bottom slope should be horizontal. The height d of the rising sill at the tail may be 0.1 to 0.2 times the critical water depth h_k at the head end section of the discharge chute.

e) The transverse water surface difference in the side channel section shall be limited within certain scope; the run-up of the water surface close to the hill, Δh, should be 10% to 25% of the average water depth h.

7.1.3.16 Curved connection shall be used for the position where the bottom slope of the discharge chute varies.

- If the bottom slope varies from gentle to steep, a parabola connection may be adopted.

- If the bottom slope varies from steep to gentle, an arc connection may be adopted; the arc radius R may be 3 to 6 times the water depth h at the section with gradient changes, and the high value should be selected if the flow velocity is high.
- If the air entrainment facilities used for alleviating cavitation are arranged in the discharge chute section, within their protection scope, the connection method at the position with gradient changes may not be limited by the above provision.

7.1.3.17 The height of the side wall in the discharge chute section shall be calculated according to the water surface line after taking into account the fluctuation and aeration plus a 0.5 m to 1.5 m safety marginal height.With regard to the contraction (diffusion) sections, the high value should be used on the positions withrelatively complex hydraulic conditions such as a bend section.

7.1.3.18 In the hydraulic design for energy dissipation by trajectory jet, the flow at various levels shall be calculated in series. The safety jet trajectory length, water jet entry width and allowable maximum scour depth shall be determined under the premises of not influencing the stability of the bucket lip foundation and the bank slopes and of ensuring the safety of the adjacent structures. The upstream slope of the scour pit shall be determined according to the geological conditions, and should be in the range of 1:3 to 1:6. Meanwhile, the scouring by the wall pressing flow and the drop flow as well as the protective measures shall be taken into account.

7.1.3.19 The radius R of the anti-arc in the deflecting bucket section may be 6 to 12 times the maximum water depth h at the lowest point of the anti-arc; the radius of the anti-arc should employ the high value if the bottom slope of the discharge chute is relatively steep, the flow velocity and unit discharge in the anti-arc section are relatively high.

7.1.3.20 The jet angle of the deflecting bucket may be 15° to 35°. When a differential type of deflecting bucket is used, the radius of the anti-arc, the width ratio of the high/low bucket lips, the elevation difference and the jet angle difference shall be reasonably selected.

7.1.3.21 The elevation of the deflecting bucket shall ensure that free deflecting flow is formed, which may be slightly lower than the maximum downstream water level.

7.1.3.22 The hydraulic design for energy dissipation by underflow shall meet the following requirements:

a) It is necessary to form a stable hydraulic jump of low submergence ratio in the stilling basin, and to avoid backflow on both sides.

b) The stilling basin should be a rectangular cross-section of equal width.

c) When the mean flow velocity at the cross section before the jump is greater than 16 m/s to 18 m/s, theauxiliary energy dissipaters such as the chute sill block and the baffle block should not be arranged in thebasin.

7.1.3.23 In the hydraulic design for energy dissipation by underflow, the flow rate at various levels shall be calculated to determine the elevation of the basin bottom, the length of the basin and the layout of the tail sill. The height of the side walls on both sides of the stilling basin may be determined according to the water depth after the jump and the appropriate safety marginal height. When the outlet flow velocity of the stilling basin exceeds the allowable anti-scour flow rate of the bedrock, or the downstream river bed of the stilling basin is not rock foundation, the protective measures including an anti-scour key wall, an apron and an anti-scour trench shall be taken.

7.1.3.24 The water flow of the outlet channel shall be smooth and stable, and shall not cause erosion failure.

7.1.3.25 Attention shall be paid to the cavitation resistance design for the spillway. For positions and regions prone to cavitation, the following cavitation resistance measures may be implemented:

a) Select a reasonable shape.

b) Control the partial unevenness of the wall surface at the boundary of the water flow, including the joint staggering, plate mark, rebar ends, unevenness of concrete surface as well as other surface irregularities and the drop sill left over from concrete construction.

c) When the flow velocity is more than 35 m/s, air entrainment measures to alleviate cavitation shall bearranged.

d) Select reasonable operation modes.

e) Adopt the material with proper cavitation resistance.

e) Adopt the material of good cavitation resistance.

7.1.3.26 On the overloaded river, the combined effect of abrasion and cavitation from sediment-laden flow on the side walls shall be considered at the same time. The materials with good cavitation resistance and abrasion resistance should be selected. When the air entrainment facilities to alleviate cavitation are adopted, the sediment abrasion and clogging problems shall be demonstrated.

7.1.4 Design of the structures

7.1.4.1 For the concrete structure of the spillway, the influence of temperature stress shall be taken into consideration, and the necessary structural measures and construction measures shall be implemented in accordance with the local climatic conditions, structural features and foundation restraint.

7.1.4.2 The intake channel floor can be unlined in case it is on the bedrock. The intake channel bottom may be lined with concrete facing, stone blocks with cement mortar and dry masonry block stone when necessary.

7.1.4.3 The thickness of the floor lining protection may be determined according to the structural requirements. The thickness of the concrete lining may be 0.3m; the anti-seepage and anti-floating stability shall be verified when necessary.

7.1.4.4 The control weir (sluice) may employ the separating or integral structure. The separating structure applies to the foundation with relatively homogeneous lithology while the integral structure applies to the situation where the foundation homogeneity is relatively poor. The transverse joints (along the flow direction) on the separating floor may be of the vertical, step, tilting or key groove types according to the stress transfer requirement. The waterstop facilities shall be arranged in the structural joints within the scope of the control section. For the separating floor, its anti-floating stability shall be checked, and drainage or anchoring measures shall be taken when necessary.

7.1.4.5 The thickness of the discharge chute floor shall not be less than 0.3 m. Necessary engineeringmeasures including anti-seepage, drainage, waterstop and anchoring may be taken. The structural jointsshall be arranged on the discharge chute floor, and their positions shall meet the requirements for structurallayout. The spacing between longitudinal/transverse joints may be 10 m to 15 m and the waterstop should bearranged for the joints.

7.1.4.6 The longitudinal and transverse joints on the discharge chute floor may usually employ bed joints. When the foundation is obviously uneven, the transverse joints should employ a semi-lapped joint, full-lapped joint or key groove joint. With regard to the discharge chute floor on which differential settlement might occur or which is not equipped with anchor bars, the key groove should be arranged on the upstream

end of the block, and full-lapped transverse joints on the upstream/downstream blocks should be adopted.

7.1.4.7 The structural joints vertical to the flow direction should not be arranged in the deflecting bucket.

7.1.4.8 For the apron of the stilling basin, the anti-floating stability shall be reviewed. When the apron is equipped with anchor bars, the anchor bars shall be extended upwards and connected to the bar-mat reinforcement on the surface layer of the apron.

7.1.4.9 The parting spacing of the apron should be same to that of the discharge chute floor. The waterstop strips should be arranged in the joints. The joints vertical to the flow direction should be semi-lapped joints or key groove joints; the joints along the flow direction should be key groove joints.

7.1.4.10 The structural joints should be arranged for the guide wall, the side wall or the side wall along the slope face that retains soil or does not retain soil on both sides of the intake channel, control section, discharge chute, deflecting bucket and the stilling basin of the spillway to separate them from the floor. For the side wall design, the anti-sliding stability, the normal stress of the base and the resultant force eccentric distance of the base shall be verified, and its anti-overturning stability shall also be verified when necessary.

7.1.4.11 When the geological conditions are relatively poor in the outlet region for the energy dissipation facilities, the anti-scouring key wall, wing wall, auxiliary weir, apron or anti-scour trench may be arranged according to the type of energy dissipation.

7.1.5 Foundation treatment design

7.1.5.1 The foundation treatment design for the spillway shall comply with the requirements for various positions for bearing capacity, anti-slide stability, foundation deformation, seepage control, anti-scour and durability in combination with the structure and operational features of the structures.

7.1.5.2 The foundation at important positions of the spillway should be excavated to the slightly-weathered middle part to upper part of the rock stratum. The discharge chute without lining shall be excavated to the hard and integral fresh or slightly-weathered rock stratum. For bedrock prone to weathering and argillization, corresponding construction protection measures shall be proposed.

7.1.5.3 With regard to the foundation built on poor rock stratum, the reinforcement measures may be taken to improve the foundation conditions, and the excavation depth shall be determined through technical and economic comparison.

7.1.5.4 The shape of the foundation pit for the structures shall be determined in accordance with the geological and topographical conditions as well as the requirements for the upper structures, and the excavation face should be continuous and smooth. The foundation pit in the control section should tilt slightly to the upstream side, and may be excavated into a step shape with an obtuse angle if it is limited by the geological and topographical conditions, the height difference is too great or it tilts slightly to the downstream side.

7.1.5.5 The scope and depth of the consolidation grouting for the spillway foundation shall be determined in accordance with the degree of crushing of the rocks, the depth of weathering, the size of the fracture and the foundation stress. The consolidation grouting should be performed after the concrete has been placed.

7.1.5.6 The layout of the anti-seepage and drainage facilities of the foundation for the spillway shall meet the following requirements:

a) Reduce the seepage and bypass seepage from the weir (sluice) foundation;

b) Prevent seepage failure in the weak intercalated layer, fault fracture zone, weak filling of rock mass fissures and other foundations with poor anti-seepage deformation performance;

c) Reduce the uplift pressure of the structure base;

d) Be reliably continuous and sufficiently durable;

e) The anti-seepage curtain shall not be arranged in the tensile stress region of the structure bottom surface;

f)I n the severe cold region, the drainage facilities shall be protected from ice and freezing failure.

7.1.5.7 The cement grouting curtain should be used as anti-seepage measures for the weir (sluice) foundation and its banks, or a concrete key wall, cut-off wall, horizontal anti-seepage plate or any combination thereof may be adopted according to the conditions. The curtain grouting shall be tested when necessary.

7.1.5.8 The scope and depth of the anti-seepage curtain in the control section shall comply with the following provisions:

a) When an obvious relative confining bed exists beneath the foundation, the curtain shall generally be extended 2 m to 3 m into this relative confining bed. The control standard for the permeable rate of therelative confining bed should be less than 5 Lu.

b) When the burial depth of the relative confining bed of the foundation is relatively small or its distribution is irregular, the position of the curtain may be selected within the maximum water depth scope greater than 0.3 to 0.7 times the weir (sluice) foundation surface. When there is a fracture zone with strong permeability, the depth and width shall be increased appropriately.

c) The scope, depth and orientation of the anti-seepage curtain extended into the bank slope shall be determined in accordance with the hydrogeological and engineering geological conditions; and the anti-seepage curtain should be extended to the intersection between the normal reservoir level and the range line of the relative confining bed (or underground water line before water filling).

d) With regard to the spillway close to the dam abutment, its curtain shall be connected to the curtain of the dam to form an integral anti-seepage system.

7.1.5.9 The curtain grouting holes should be arranged in one row; in the section with relatively poor geological conditions, broken rock mass, developed fractures or possible seepage deformation, the grouting holes may be arranged in two rows, and arranged alternately with the first row of grouting holes. The spacing between holes for the curtain grouting may be 1.5 m to 3.0 m, and the distance between rows should be slightly smallerthan the spacing between holes. The drilling direction of the curtain should be vertical or be tilting slightlytoward the upstream side; the holes shall be drilled through the bedding plane of the rock mass and mainfracture, but should not be tilting toward the downstream side.

7.1.5.10 he curtain grouting shall be performed after concrete weight of a certain thickness and the consolidation grouting is completed. The grouting pressure may be determined through testing, and should not be less than 0.2 MPa to 0.5 MPa for the surface section of curtain holes, should not be less than 0.4 MPa to 0.8 MPa for the bottom section of curtain holes, under the principle that the rock mass is not lifted.

7.1.5.11 The drainage facilities beneath the discharge chute floor shall be laid out according to the specific conditions:

a) The longitudinal and transverse discharge ditches (pipes) should be arranged beneath the discharge chute floor, to form an inter-connected ditch (pipe) network system.

b) In the section where the rock foundation is weak, the uplift pressure beneath the floor is too great or it is inconvenient to install anchor bars, the continuous drainage blanket may be arranged or the combination of a drainage blanket and a drainage ditch (pipe) may be used.

c) The spacing between transverse/longitudinal drainage ditches (pipes) should correspond to the longitudinal/transverse joints on the floor, but the drainage ditches (pipes) should not be arranged across the joints.

7.2 Sluice

7.2.1 General provisions

7.2.1.1 The sluice chamber may employ the open-type, breast wall, culvert-type or double-deck structural style according to the discharging features and operational requirements. The gravity centre of the entire sluice chamber structure shall be close to the centre of the sluice chamber floor, and inclined to the side with the higher water level.

a) With regard to the sluice with a relatively high lock sill elevation and relatively low water retaining height, the open-type structure may be adopted.

b) With regard to the sluice with relatively low lock sill elevation and relatively high water retaining height, the breast wall or culvert-type structure may be adopted.

7.2.1.2 The structure form selection and layout of the sluice on the soft foundation shall meet the following requirements:

a) The sluice chamber shall be symmetrical in structural layout, light in weight, integral and have high rigidity.

b) The foundation pressure difference between the adjacent partitioned projects shall be small.

c) The waterstop types and materials to be selected should be durable and adaptive to relatively significant deformation.

d) The length and burial depth of the floor shall be increased appropriately.

7.2.1.3 The structure form selection and layout of the sluice on the frost-heaving foundation shall meet the following requirements:

a) The structure of the sluice chamber shall be integral and have high rigidity.

b) With regard to the sluice on the frost-heaving foundation, its burial depth of the foundation shall not be less than the design frost depth of the foundation.

c) Under the premise of meeting the requirement for the bearing capacity of foundation soil, the contact area between the sluice chamber bottom and the frost-heaving soil shall be reduced.

d) Under the premise of meeting the requirements for anti-seepage, anti-scouring and flow joint conditions, the inlet and outlet length shall be shortened.

e) The block size of the bottom structures including the sluice blanket and the stilling basin floor exposed in winter shall be reduced appropriately.

7.2.1.4 The structure form selection and layout of the sluice in earthquake regions shall meet the following requirements:

a) The sluice chamber shall be symmetrical in structural layout, light in weight, integral and high in rigidity.

b) The height of the service bridge bent frame shall be lowered, the top weight shall be reduced and the shear connection between the bent frame column and the gate pier/bridge deck structure.

c) The joints shall be arranged on the gate pier, and the waterstop types and materials to be used should be durable and adaptive to relatively significant deformation.

d) The connection between the foundation and the sluice chamber floor shall be reinforced, and effective anti-seepage measures shall be taken.

e) The filling depth behind the side pier (quay wall) shall be appropriately lowered to reduce the additional load.

f) The upstream anti-seepage blanket shall be of concrete structure, and appropriately reinforced with rebar.

7.2.2 Layout of the sluice chamber

7.2.2.1 The open-type sluice chamber may be of integral or separating structure according to the foundation conditions and stress situation. The culvert-type sluice chamber should not be of separating structure.

7.2.2.2 The top elevation of the sluice shall be determined according to two operational modes, namely water retaining and water discharging.

a) In case of water retaining, the sluice top elevation shall not be lower than the sum of the normal reservoir level (or maximum water retaining level) of the sluice plus the calculated height of the wave and the corresponding safety marginal height;

b) In case of water discharging, the sluice top elevation shall not be lower than the sum of the design flood level (or verified flood level) and the corresponding safety marginal height.

7.2.2.3 The lock sill elevation shall be determined through technical and economic comparison in accordance with the river (channel) bottom elevation, water flow, sediment, topography and geology of the sluice site as well as the construction and operational conditions of the sluice and in combination with the selected weir type, sluice type and total net width of the sluice orifice.

7.2.2.4 The total net width of the sluice orifice shall be determined through technical and economic comparison according to the discharge characteristics, geological conditions of the downstream river bed and the requirements for safe discharge, and in combination with the selection of the diameter and number of sluice orifices.

7.2.2.5 The diameter of the sluice orifice shall be determined through comprehensive analysis in accordance with the foundation conditions of the gate, the operational requirements and structural style of the gate, the hoist capacity as well as the fabrication, transportation and installation of the gate. When there are less than 8 sluice orifices, the number of orifices should be singular.

7.2.2.6 In general, the sluice chamber should employ flat floors; when the sluice is on the soft foundation or the load is relatively heavy, the box-type flat floor may be used.

7.2.2.7 The thickness of the sluice chamber floor shall be determined through calculation according to the foundation conditions of the sluice chamber, the acting loads and net width of the sluice orifice and in combination with the composition requirements.

7.2.2.8 The fragment length of the sluice chamber structure vertical to the flow direction (i.e. spacing between permanent joints along the flow direction) shall be determined according to the foundation conditions of the sluice chamber and the structural features of the structure, and with consideration given to the construction methods and measures.

7.2.2.9 With regard to the sluice on solid foundation or using pile foundation, the joints may be arranged on the sluice chamber floor or gate pier for segmentation; with regard to the sluice on the weak foundation or in the earthquake region, the joints should be arranged in the middle part of the gate pier for segmentation.

7.2.2.10 The fragment length of the sluice on the rock foundation should not exceed 20 m and the fragmentlength of the sluice on the soil foundation should not exceed 35 m. The permanent joints may be vertical cut-through joints, inclined-lapped joints or serrated- lapped joints; the joint width may be 20 mm to 30 mm.

7.2.2.11 The contour design of the gate pier shall meet the requirements for smooth flow through the sluice, small lateral contraction and large flow capacity. The upstream pier head may be semi-circular and the downstream pier head may be in streamline form.

7.3.2.12 The thickness of the gate pier shall be determined according to the diameter of the sluice orifice, the stress conditions, structural requirements and construction methods. The minimum thickness should not be less than 0.4m at the gate slot of the gate pier of the plane gate.

7.2.2.13 The service gate slot shall be arranged in the position of the gate pier with relatively smooth flow, and its breadth-depth ratio should be 1.6 to 1.8. The bulkhead gate slot should be arranged according to the demands of management and maintenance; its net distance to the service gate slot should not be less than 1.5m.

7.3.2.14 The structure type selection and layout of the gate shall be reasonably determined according to its stress situation, control operation requirements, fabrication, transportation, installation and maintenance conditions, and in combination with the structural layout of the sluice chamber. The top of immersed gate shall have a 0.3 m to 0.5 m safety marginal height above the possible maximum water retaining level.

a) For the sluice with a relatively high water retaining height and large orifice diameter, and the water discharge is to be controlled with the gate, the radial gate should be adopted.

b) When the permanent joints are arranged on the sluice chamber floor, the plane gate should be adopted.

c) The sluice which is required to discharge ice or wood should employ the plane gate or down-horizontal arc gate; the sluice on the overloaded river should not employ the down-horizontal arc gate.

d) The bulkhead gate shall employ the plane gate or stop log gate.

7.2.2.15 The bottom elevations of the beam (slab) for the service bridge, maintenance bridge and access bridge shall be at least 0.5 m higher than the maximum flood level; if there is floating ice, the elevation shallbe at least 0.2 m above the floating ice surface.

7.2.3 Anti-seepage and drainage layout

7.2.3.1 The anti-seepage and drainage layout of the sluice shall be determined through comprehensive analysis according to the geological conditions of the sluice foundation and the difference between the upstream and downstream water levels, and in combination with the layout of the sluice chamber, the energy dissipation and anti-scour and the connections to both banks.

7.2.3.2 The contour line of the sluice foundation on the homogeneous soil foundation shall be determined through reasonable arrangement according to the selected anti-seepage and drainage facilities. The anti-seepage length of the preliminarily prepared sluice foundation shall meet the requirements of the formula (20).

$$L = C\Delta H \quad (20)$$

where

L is the anti-seepage length of the sluice foundation, i.e. the sum of the length of the horizontal section and the vertical section of the anti-seepage parts in the contour line of the sluice foundation, in m;

ΔH is the daifference between the upstream and downstream water levels, in m;

C is the allowable seepage path coefficient.

7.2.3.3 When the sluice foundation is of medium loam, light loam or heavy sandy loam, the reinforced concrete or clay blankets, or the geomembrane anti-seepage blankets shall be arranged on the upstream side of the sluice chamber; the filtering layer shall be arranged at the bottom of the downstream apron of the sluice chamber. The permeability coefficient for the clay blanket shall be at least 100 times less than the permeability coefficient for the foundation soil.

7.2.3.4 When the sluice foundation is a relatively thin loam layer, and its underlying stratum is thick relative to the confining bed, the anti-seepage and anti-floating stability of the overlying soil shall be verified. When necessary, the catchpit or drainage ditch that goes deep into the relative confining bed shall be arranged on the downstream side of the sluice chamber, and clogging prevention measures shall be taken.

7.2.3.5 When the sluice foundation is silt, silty-fine sand, light sandy loam or light silty sandy loam, the blanket should be combined with the vertical anti-seepage bodies (reinforced concrete slab, cement mortar curtain, high pressure jet grouting curtain, concrete cut-off wall and geomembrane vertical anti-seepage structure) for the upstream side of the sluice chamber and the vertical anti-seepage bodies should be laid out on the upstream end of the sluice chamber floor. On the silty-fine sand foundation in the earthquake region, the vertical anti-seepage bodies beneath the sluice chamber floor should form an enclosed structure. With regard to the silt, silty-fine sand, light sandy loam or light silty sandy loam foundation, the average gradient of the seepage and the exit gradient shall be less than the allowable values, and the filtering layer with good grading shall be arranged at the seepage exit (including the exits for lateral seepage on both banks).

7.2.3.6 When the sluice foundation is a relatively thin sandy soil layer or sand-gravel layer, and the underlying stratum is a thick relative confining bed, the cut-off trench or cut-off wall should be arranged on the upstream end of the sluice chamber floor, and the filtering layer shall be arranged at the downstream seepage exit from the sluice chamber. The depth of the cut-off trench and cut-off wall embedded in the relative confining bed shall not be less than 1.0m. When the sand-gravel layer of the sluice foundation is relatively thick, the combination of the blanket and the suspended cut-off wall may be adopted on the upstream side of the sluice chamber, and the filtering layer shall be arranged at the downstream seepage exit from the sluice chamber. When the sluice foundation is a sand-gravel layer or coarse gravel mingled pebble bed with a relatively large grain size, the deep key wall or deep cut-off wall should be arranged on the upstream end of the sluice chamber floor, and the filtering layer shall be arranged at the downstream seepage exit from the sluice chamber.

7.2.3.7 When the sluice foundation is thin cohesive soil and interbedded sandy soil, a set of vertical anti-seepage bodies shall additionally be arranged on the front end of the blanket; the drainage ditch or shallow catchpit should be arranged on the downstream side of the sluice chamber and the clogging prevention measures shall be taken.

7.2.3.8 When the sluice foundation is rock foundation, the cement grouting curtain may be arranged at the upstream end of the sluice chamber floor according to the anti-seepage requirements.

7.2.3.9 The key walls should be arranged on the upstream and downstream ends of the sluice chamber floor and the depth of the key walls may be 0.5 m to 1.5 m.

7.2.3.10 The length of the blanket may be determined according to the anti-seepage requirements of the sluice foundation, and should usually be 3 to 5 times the maximum difference between the upstream and downstream water levels.

a) The minimum thickness of the concrete or reinforced concrete blankets should not be less than 0.4m, the spacing between the permanent joints along the flow direction may be 8 m to 20 m, the spacing betweenjoints on the blanket close to the wing wall should employ the minimum value and the joint width may be20 mm to 30 mm.

b) The thickness of the clay or loam blanket shall be determined through calculation in accordance with the permissible hydraulic gradient of the blanketing soil material. The minimum thickness of its front end should not be less than 0.6 m, and the thickness should increase gradually in the direction of the sluicechamber. The protective layer shall be arranged on the blanket.

c) The thickness of the anti-seepage geomembrane shall be determined in accordance with the acting head, the width of the possible fracture of the soil mass beneath the membrane as well as the strain and strength of the membrane, but should not be less than 0.5 mm. The protective layer shall be arranged onthe geomembrane.

d) In the cold regions and severe cold regions, the spacing between permanent joints should be appropriately reduced on the concrete or reinforced concrete blanket, the thickness of the clay or loam blanket shall be increased appropriately, and the blanket shall be kept from being exposed to the atmosphere in winter.

7.2.3.11 The minimum thickness of the reinforced concrete sheet pile should not be less than 0.2 m, thewidth should not be less than 0.4 m and the sheet piles shall be connected with trapezoid tongue-and-groove.The minimum thickness of the cement mortar curtain or the high pressure jet grouting curtain should notbe less than 0.1 m and the minimum thickness of the concrete cut-off wall should not be less than 0.2 m.The thickness of the underground vertical anti-seepage geomembrane should not be less than 0.25 mm; thecomposite geomembrane should be used, and its thickness should not be less than 0.5 mm.

7.2.4 Energy dissipation and anti-scour layout

7.2.4.1 The underflow energy dissipation should be used on the downstream side of the sluice. The layout form of the energy dissipation facilities includes:

a) When the tailwater depth on the downstream side of the sluice is less than the depth after the jump, the down-cutting stilling basin may be used for energy dissipation. The stilling basin may be connected to the sluice floor with the slope; the gradient of the slope should not be more than 1:4.

b) When the tailwater depth on the downstream side of the sluice is slightly less than the depth after the jump, the baffle sill type stilling basin may be used for energy dissipation.

c) When the tailwater depth on the downstream side of the sluice is much less than the depth after the jump and the calculated depth of the stilling basin is relatively great, the combination of the down-cutting stilling basin and the baffle sill type stilling basin may be used for energy dissipation.

d) When the difference between the upstream and downstream water levels of the sluice is relatively great, and the tailwater depth is relatively shallow, the secondary or multi-stage stilling basin may be used for energy dissipation.

e) The apron and the anti-scour trench (or anti-scour wall) shall be arranged for the down-cutting stilling basin, baffle sill type stilling basin and the combination type stilling basin.

f) The auxiliary energy dissipaters such as baffle piers and baffle beams may be arranged in the stilling basin.

7.2.4.2 When the tailwater depth on the downstream side of the sluice is relatively deep, the variation is relatively small and the anti-scour capacity of the river bed and bank slope is relatively high, surface-flow type energy dissipation may be used.

7.2.4.3 When the head borne by the sluice is relatively high and the downstream river bed and bank slopes are hard rock masses, deflecting-flow type energy dissipation may be used.

7.2.4.4 With regard to the sluice built in the overloaded river carrying relatively large gravel, the stilling basin should not be arranged; it may be connected to the downstream river channel through the anti-scouring and wear-resisting sloping apron, and the anti-scour wall shall be arranged at the end. At the position with high water flow rate, anti-scouring and anti-cavitation measures shall be taken.

7.2.4.5 With regard to the large-scale sluice with multiple orifices, the separating piers or the guide walls may be arranged for energy dissipation and anti-scour in different zones.

7.2.4.6 The apron shall be flexible, water-permeable and rough in surface; its composition and anti-scouring capacity shall be adaptive to the water flow velocity. The apron should be made into a slope with a gradient equal to or less than 1:10, the anti-scour trench (or anti-scour wall) shall be arranged at its end and the cushion layer shall be arranged beneath the apron.

7.2.4.7 The engineering layout of the upstream/downstream slope protection and upstream bottom protection of the sluice shall be determined in accordance with the anti-scour trench and the anti-scour capacity of the soil in the river bed. The length of the slope protection shall be greater than the length of the bottom protection (apron). The cushion layers shall be arranged beneath the slope protection and the bottom protection. The anti-scour trench (or anti-scour wall) should also be arranged at the head end of the upstream bottom protection when necessary.

7.2.5 Layout of the connection with both banks

7.2.5.1 The connection of the sluice with both banks shall ensure the stability of the bank slopes, improve the water intake/outlet conditions of the sluice, enhance the discharge capacity and energy dissipation and anti-scour effects, satisfy the lateral anti-seepage requirement, loosen the side load's influence on the floor of the sluice chamber and be favourable for environmental greening. The layout of the connection with both banks shall be adaptive to the layout of the sluice chamber.

7.2.5.2 The connection of the sluice with both banks should be of the upright wall structure; when the difference between the upstream and downstream water levels is not great, the slope structure may also be adopted, but the issues of anti-seepage, anti-scour and frost resistance shall be considered. On the solid or medium-solid foundation, the quay wall and wing wall may be of the gravity type or counterfort structure; on the soft foundation, the empty-box structure should be adopted. The combination or separation between the quay wall and the side gate pier shall be determined in accordance with the sluice chamber structure and the foundation conditions.

7.2.5.3 When the quay walls are required on both sides of the sluice chamber, the quay walls should be separated from the side gate piers if the sluice chamber is segmented by joints in the middle of gate pier; the quay walls may be used concurrently as the side gate piers or may be made into the empty-box type if the sluice chamber is segmented by joints on the sluice floor. For non-open sluice chamber structures without permanent joints and with fewer sluice orifices, the side gate piers may be used to substitute for the quay walls.

7.2.5.4 The upstream and downstream wing walls should be smoothly connected to the sluice chamber and the bank slopes. The plane layout of the upstream wing wall should be in arc or elliptic arc form; while the plane layout of the downstream wing wall should be a combination of arc (or elliptic arc) and straight line or a fold line. On the hard cohesive soil and rock foundation, the upstream and downstream wing walls may be connected to the bank slopes with the warped surfaces.

7.2.5.5 The projected length of the upstream wing wall along the water flow direction shall be more than or equal to the blanket length. The average divergence angle of the downstream wing wall should be 7° to 12° on each side, and its projected length along the water flow direction shall be greater than or equal to the length of the stilling basin. According to the lateral anti-seepage requirements, the top elevation of the upstream and downstream wing walls shall be higher than the most disadvantageous operating water levels of the upstream and downstream sides respectively.

7.2.5.6 The subsection length of the wing wall shall be determined in accordance with the structure and foundation conditions. The length of the wing wall subsection built on the solid or medium-solid foundation may be 15 m to 20 m; the length of the wing wall subsection built on the soft foundation or backfill soil maybe shortened appropriately.

7.2.6 Hydraulic design

7.2.6.1 The hydraulic design of the sluice shall include the calculation of the total net width of the sluice orifice, the design and calculation of the energy dissipation and anti-scour facilities as well as the formulation of the operational mode of the sluice.

7.2.6.2 When performing the hydraulic design, it is necessary to consider the negative influences of the possible sedimentation or scouring in upstream and downstream river beds as well as the variation of the down sluice stage, after the sluice is built, on the discharge capacity and the energy dissipation and anti-scour facilities.

7.2.6.3 The unit discharge from the sluice lock shall be selected in accordance with the geological conditions of the downstream river bed, the difference between the upstream and downstream water levels, the depth of the downstream tail water, the ratio of the overall width of the sluice chamber to the width of the river channel, the construction features of the sluice and the downstream energy dissipation and anti-scour facilities.

7.2.6.4 The difference between the upstream and downstream water levels of sluice shall be selected through comprehensive comparison in accordance with the influence of upstream submerging, the permissible unit discharge and the construction cost of the sluice. In general, the difference between the upstream and downstream water levels of the sluice in the plain area may be 0.1 m to 0.3 m.

7.2.6.5 The energy dissipation and anti-scour facilities on the downstream side of the sluice shall uniformly meet the requirements for dissipating the kinetic energy and diffusing the water flow under all kinds of hydraulic conditions, and shall be properly connected to the downstream river channel.

7.2.6.6 For the underflow energy dissipation design, the hydraulic calculation shall be performed according to the discharge conditions (particularly the initial flow condition) of the sluice to determine the depth, length and floor thickness of the stilling basin.

7.2.6.7 For the surface-flow energy dissipation design, the hydraulic calculation shall be performed according to the discharge at various stages of the sluice and the corresponding water levels for possible combinations to select the height of the falling-sill, the elevation angle of the sill top, the anti-arc radius and length of the falling-sill, the thrash out and to prevent the erosion of the sluice foundation and scouring problem of the downstream banks.

7.2.6.8 For the energy dissipation design by deflecting flow, the hydraulic calculation shall be performed according to the discharge at various stages of the sluice to select the top elevation of the deflecting bucket, the anti-arc radius and bucket angle, to calculate the jet distance and maximum depth of the scouring pit for discharged flow and to take necessary protective measures.

7.2.6.9 The length of the apron shall be calculated and determined according to the possible disadvantageous water levels and the flow combination.

7.2.6.10 The depth of the downstream anti-scour trench shall be comprehensively determined through the river bed soil properties, determined unit discharge of determined apron end and the downstream water depth, but shall not be less than the scouring depth of the river bed at the apron end.

7.2.6.11 The depth of the upstream anti-scour trench shall be determined comprehensively determined through the river bed soil properties, the unit discharge at the head end of the upstream bottom protection and the upstream water depth, but shall not be less than the scouring depth of the river bed at the head end of the upstream bottom protection.

7.2.6.12 For the control and operation of the sluice, the opening and closing sequence of the sluice and the sluice opening shall be specified according to the hydraulic design or hydraulic model testing results for the sluice to avoid an unfavourable flow regime like concentrated flow or refractive flow. The control and operation mode of the sluice shall meet the following requirements:

a) When discharging water through sluice orifices, the hydraulic jump shall completely occur in the stilling basin completely in all cases.

b) The sluice gates should be uniformly opened and closed by stages at the same time. If they could not be opened or closed fully at the same time, the sluice shall be opened in sections or zones from the middle orifices to both sides, or opened symmetrically by every other orifice, and be closed in the opposite sequence.

c) With regard to the double-deck sluice orifices or the double-leaf sluice laid out in layers, it is necessary to open the sluice orifices on the bottom layer or the lower leaf of the sluice first, and then open the sluice orifices on the top layer or the upper leaf of the sluice; when closing, perform this in the opposite sequence.

d) Strictly control the sluice opening under initial flow conditions and prevent the sluice from remaining in the opening area with relatively significant vibration when releasing the water.

e) When closing the sluice or reducing the sluice opening, prevent the water level of the river channel downstream of the sluice from dropping too fast.

7.2.7 Anti-seepage and drainage design

7.2.7.1 The anti-seepage and drainage design of the sluice shall be performed in accordance with the geological conditions of the sluice foundation, the layout of the sluice foundation and the contour line on both sides as well as the upstream and downstream water level conditions. Its contents shall include: calculation of seepage pressure, verification of anti-seepage stability, design of the filtering layer, design of the anti-seepage curtain and drainage holes and design of the waterstop for the permanent joint.

7.2.7.2 The seepage pressure at the sluice foundation bottom on the rock foundation may be calculated with the total cross-section linear distribution method, but the actions and effects on the reduction of seepage pressure when the anti-seepage curtain and the drainage hole are arranged shall be considered.

7.2.7.3 The seepage pressure acting on the sluice foundation bottom located on the earth base may be calculated with the improved resistance coefficient method or flow net method; with regard to the important sluice on the complex soil base, the calculation shall be performed with the numerical method.

7.2.7.4 When the permeability coefficient of the soil layers behind the quay wall and the wing wall is less than or equal to the permeability coefficient of the foundation soil, the lateral seepage pressure may be approximately the calculated value of the forward seepage pressure at the sluice bottom on the corresponding positions, but the variation of the water level in front of the wall and the influence of the underground water recharge behind the wall shall be taken into account; when the permeability coefficient of the soil layers behind the quay wall and the wing wall is greater than the permeability coefficient of the foundation soil, the lateral bypass flow may be calculated with the calculation method for seepage under pressure at the sluice bottom.

7.2.7.5 When verifying the anti-seepage stability of the sluice foundation, the seepage gradients of the horizontal section and the outlet section are required to be less than the corresponding permissible seepage gradient values for the soil mass respectively.

7.2.7.6 The curtain grouting holes in the sluice rock foundation should be arranged in a single row, with the central spacing intervals at 1.5 m to 3.0 m and the hole depth 0.3 to 0.7 times the maximum water depth upstream of the sluice. The curtain grouting shall be performed after finishing a layer of capping concrete and also completing the consolidation grouting process. The grouting pressure shall not lift the foundationrocks; the control standard for the permeable rate of the anti-seepage curtain should not be greater than 5 Lu.

7.2.7.7 After curtain grouting, the drainage holes should be arranged in a single row, and the distance to the curtain grouting holes should not be less than 2.0 m. The spacing between drainage holes should be 2.0 m to 3.0 m, the hole depth should be 0.4 to 0.6 times the curtain grouting hole depth and should not be less than the consolidation grouting hole depth.

7.2.7.8 One layer of the waterstop shall be arranged for the permanent joints within the anti-seepage scope; the waterstop type shall be adaptive to the requirements for differential settlement and temperature changes. The water-stop materials shall be durable; the intersection between the vertical waterstop and the horizontal waterstop shall constitute a sealing system.

7.2.8 Structural design

7.2.8.1 The structural design of the sluice shall be performed according to the structure stress conditions and the engineering geological conditions. Its contents shall include:

a) Load and load combination.

b) Stability calculation for the sluice chamber, quay wall and wing wall.

c) Structural stress analysis.

7.2.8.2 When masonry is used for part of the sluice structure, the boulder strips or rock blocks shall be weather-resistant, the freeze-thawing loss ratio shall be less than 1%, the unit weight should not be less than 30 kg and the strength grade of the masonry mortar shall not be lower than M7.5. Effective anti-seepagedrainage measures shall be taken for the masonry structure; in the severe cold and cold regions, thermalinsulation and anti-freezing measures shall also be taken for the masonry structure of the sluice.

7.2.8.3 For the sluice in the earthquake region with the peak ground acceleration larger than 0.1g, the earthquake action shall be carefully analysed and the anti-seismic calculation shall be properly performed, additionally, safe and reliable seismic fortification measures shall be taken.

7.2.8.4 Loaded on the water gate include: dead-weight, water weight, hydrostatic pressure, uplift pressure, earth pressure, sediment pressure, wind pressure, wave pressure, ice pressure, seismic load, and other possible loads. The loads acting on the sluice may be classified into basic load and special load. When the sluice is designed, all kinds of loads which may act at the same time shall be combined, and used with reference to Table 16. Other possible disadvantageous combinations may also be considered when necessary.

Table 16 - Calculation load combination of sluice

Load combination	Calculation condition	Loads												Description
		Dead weight	Water weight	Hydrostatic pressure	Uplift pressure	Soil pressure	Silt pressure	Wind pressure	Wave pressure	Ice pressure	Frost heaving pressure of soil	Earthquake load	Others	
Basic combination	Construction completion condition	√	-	-	-	√	-	-	-	-	-	-	√	The uplift pressure generated by the underground water may be considered when necessary.
	Normal reservoir level condition	√	√	√	√	√	√	√	√	-	-	-	√	The water weight, hydrostatic pressure, uplift pressure and wave pressure are calculated as per the normal reservoir level combination.
	Design flood level condition	√	√	√	√	√	√	√	√	-	-	-	-	The water weight, hydrostatic pressure, uplift pressure and wave pressure are calculated as per the design flood level combination.
	Frost condition	√	√	√	√	√	√	√	-	√	√	-	√	The water weight, hydrostatic pressure, uplift pressure and ice pressure are calculated as per the normal reservoir level combination.

Special combination	Construction condition	√	-	-	-	√	-	-	-	-	-	-	√	The temporary loads in various stages of the construction shall be considered.
	Overhaul condition	√	-	√	√	√	√	√	√	-	-	-	√	The hydrostatic pressure, uplift pressure and wave pressure are calculated as per the normal reservoir level combination (or as per design flood level combination or low water level condition in winter when necessary).
	Verified flood level condition	√	√	√	√	√	√	√	√	-	-	-	-	The water weight, hydrostatic pressure, uplift pressure and wave pressure are calculated as per the verified flood level combination.
	Earthquake condition	√	√	√	√	√	√	√	√	-	-	√	-	The water weight, hydrostatic pressure, uplift pressure and wave pressure are calculated as per the normal reservoir level combination.

7.2.8.5 For the stability calculation of the sluice chamber, the gate section between two adjacent permanent joints along the water flow direction should be used as the calculation unit.

7.2.8.6 The stability calculation of the sluice chamber on a soil foundation shall meet the following requirements:

a) Under various calculation conditions, the average foundation stress of the sluice chamber shall not be more than the allowable bearing capacity of the foundation, and the maximum foundation stress shall not be more than 1.2 times the allowable bearing capacity of the foundation;

b) The ratio between the maximum value and the minimum value of the foundation stress of the sluice chamber shall meet the provision for allowable value in Table 17;

c) The anti-sliding stability safety factor along the foundation surface of the sluice chamber shall not be less than the allowable value for safety (1.20 for basic combination and 1.0 to 1.05 for the special combination).

Table 17 - Allowable value for ratio between the maximum value and the minimum value foe foundation stress of the sluice chamber on the soil foundation

Foundation soil	Load combination	
	Basic combination	Special combination
Soft	1.50	2.00
Medium hard	2.00	2.50
Hard	2.50	3.00

7.2.8.7 The stability calculation of the sluice chamber on the rock foundation shall meet the following requirements:

a) Under any calculation conditions, the maximum foundation stress of the sluice chamber shall not be more than the allowable bearing capacity of the foundation.

b) Under non-earthquake condition, the tensile stress shall not occur on the foundation of the sluice chamber; under earthquake conditions, the tensile stress on the foundation of the sluice chamber shall not be more than 100 kPa.

c) The anti-sliding stability safety factor along the foundation surface of the sluice chamber shall not be less than the allowable value for safety (if calculated as per the pure friction formula: 1.05 for the basic combination and 1.0 for the special combination; if calculated as per the shearing resisting formula: 3.0 for the basic combination and 2.5 for the special combination).

7.2.8.8 The stress on the foundation of the sluice chamber shall be respectively calculated according to the following provisions in accordance with the structural layout and the stress.

a) When the structural layout and the stress are symmetric, the calculation shall be performed according to the formula (21):

$$P_{\substack{\max \\ \min}} = \frac{\sum G}{A} \pm \frac{\sum M}{W} \quad \text{..... (21)}$$

where

$P_{max/min}$ is the maximum value or minimum value of calculated foundation stress of calculated sluice chamber, in kPa;

$\sum G$ is the all vertical loads acting on the sluice chamber (including the uplift pressure on the foundation surface of the sluice chamber, in kN;

$\sum M$ is the moment of all vertical and horizontal loads acting on the sluice chamber relative to the centroidal axis of foundation surface vertical to the water flow direction, in kN·m;

A is the area of the foundation surface of the sluice chamber, in m^2;

W is the sectional moment of the foundation surface of the sluice chamber relative to the centroidal axis of this foundation surface vertical to the water flow direction, in m^3

b) When the structural layout and the stress are asymmetric, the calculation shall be performed according to the formula (22):

$$P_{\substack{\max \\ \min}} = \frac{\sum G}{A} \pm \frac{\sum M_x}{W_x} \pm \frac{\sum M_Y}{W_Y} \quad \text{..... (22)}$$

where

$\sum M_x$, $\sum M_y$ is the moment of all vertical and horizontal loads acting on the sluice chamber relative to the centroidal axis x and y of foundation surface, in kN·m;

W_x, W_y is the sectional moment of foundation surface of sluice chamber relative to the centroidal axis x and y of this foundation surface, in m^3.

7.2.8.9 The anti-sliding stability safety factor on the soil foundation along the foundation surface of the sluice chamber shall be calculated according to the formula (23) or the formula (24):

$$K_c = \frac{f \sum G}{\sum H} \quad \text{..... (23)}$$

$$K_c = \frac{tg\phi_0 \sum G + C_0 A}{\sum H} \quad \text{..... (24)}$$

where

K_C is the anti-sliding stability safety factor along the foundation surface of the sluice chamber;

f is the friction coefficient between the foundation surface of the sluice chamber and the foundation;

$\sum H$ is the all horizontal loads acting on the sluice chamber, in kN;

φ_0 is the frictional angle between the foundation surface of the sluice chamber and the soil foundation (°);

C_0 is the cohesive force between the foundation surface of the sluice chamber and the soil foundation, in kPa.

7.2.8.10 The anti-sliding stability safety factor on the rock foundation along the foundation surface of the sluice chamber shall be calculated according to the formula (23) or the formula (25):

$$K_c = \frac{f \sum G + C'A}{\sum H} \quad \text{..... (25)}$$

where

f′ is the shearing resisting friction coefficient between the foundation surface of the sluice chamber and the rock foundation;

C′ is the shearing resistance cohesive force (kPa) between the foundation surface of the sluice chamber and the rock foundation.

k is the anti-sliding stability safety factor. When the sluice chamber is subject to the action of a two-way horizontal load, and the anti-sliding stability on the direction of its resultant force shall be verified.

7.2.8.11 If the test data is unavailable, the value of the friction coefficient between the foundation surface of the sluice chamber and the foundation may be selected from the empirical values listed in Table 18 according to the category of foundation.

Table 18 - Empirical values of friction coefficient f between foundation surface of sluice chamber and foundation

Category of foundation		f
Clay	Weak	0.20~0.25
	Medium-hard	0.25~0.35
	Hard	0.35~0.45
Loam and silt loam		0.25~0.40
Sandy loam and silty soil		0.35~0.40
Fine sand and very fine sand		0.40~0.45
Medium sand and coarse sand		0.45~0.50
Sand gravel		0.40~0.50
Gravel and cobble		0.50~0.55
Gravelly soil		0.40~0.50
Soft rock	Extremely soft	0.40~0.45
	Soft	0.45~0.55
	Relatively soft	0.55~0.60
Hard rock	Relatively hard	0.60~0.65
	Hard	0.65~0.70

7.2.8.12 The value of the frictional angle φ_0 and the value of the cohesive force C_0 between the foundation surface of the sluice chamber and the soil foundation may be adopted according to the category of soil foundation and with reference to Table 19.

Table 19 - Values φ_0 and C_0 (soil foundation)

Category of soil foundation	φ_0	C_0
Cohesive soil	0.9φ	(0.2~0.3) C
Sandy soil	(0.85~0.9) φ	0

7.2.8.13 The value of the shearing resisting friction coefficient f′ and the value of the shearing resisting cohesive force C’ between the foundation surface of the sluice chamber and the rock foundation may be selected according to the shearing resisting test results for rocks in a laboratory and with reference to the values listed in Table 20.

Table 20 - Values f′ and C′ (rock foundation)

Category of rock foundation		f′	C′ (MPa)
Hard rock	Hard	1.5~1.3	1.5~1.3
	Relatively hard	1.3~1.1	1.3~1.1
Soft rock	Relatively soft	1.1~0.9	1.1~0.7
	Soft	0.9~0.7	0.7~0.3
	Very soft	0.7~0.4	0.3~0.05

7.2.8.14 If the sluice chamber is equipped with two sets of bulkhead gates or with only one set of bulkhead gates, the anti-floating stability shall be calculated when the service gate and the bulkhead gate are used for maintenance. The anti-floating stability safety factor for the sluice chamber shall not be less than 1.10 under basic load combination conditions and shall not be less than 1.05 under special load combination conditions

8 Diversion structure

8.1 Water intake

8.1.1 The water intakes include the following types:

a) The open intake should apply to the diversion-type hydropower station with open channel and the variation in water level upstream of the leading edge of the intake should be slight.

b) The river bed intake should apply to the hydropower station in the river channel, and be an integral part of the powerhouse structure.

c) The dam intake should apply to all kinds of concrete dams and masonry dams.

d) The bank intake should apply to the pressure diversion-type hydropower station, and may be classified into a bank-tower intake, shaft intake and bank slope intake according to their structural features and gate position. The bank-tower intake should apply to the geological conditions unfavourable for arranging the bell-mouth in the rock mass on the bank side. The shaft intake should apply to the bank slope with an integral and stable rock mass, and that is convenient for external traffic. The application conditions for the bank slope intake are the same as those for shaft intake.

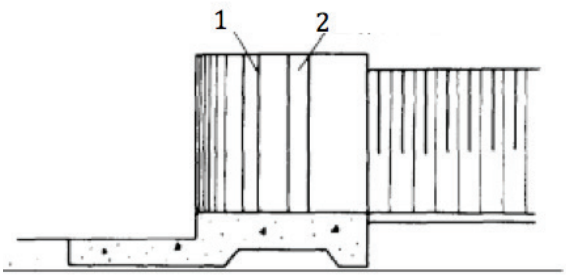

Key

1 bulkhead gate slot 2 service gate slot

a) Open intake

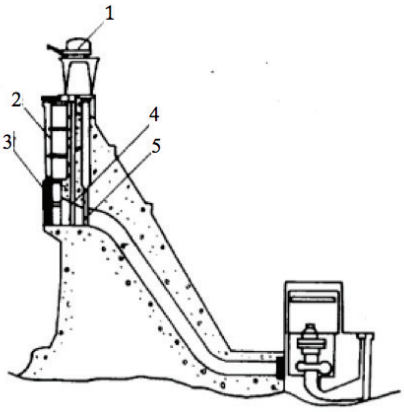

Key

1	hoist	2	trash rack frame
3	trash rack	4	bulkhead gate slot
5	emergency gate slot		

b) Dam intake

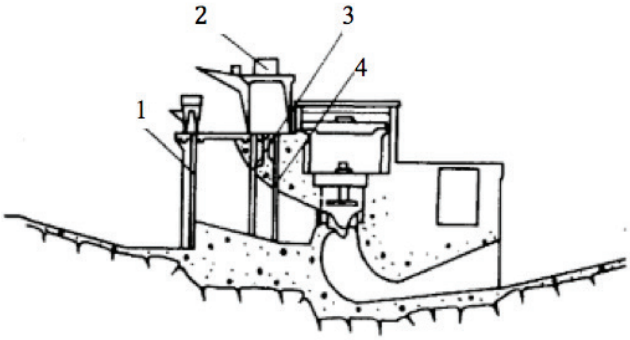

Key

1	trash rack	2	hoist
3	bulkhead gate slot	4	emergency gate slot

c) River bed intake

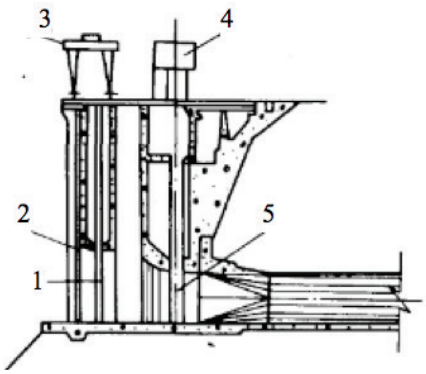

Key

1 bulkhead gate slot

2 trash rack

3 hoist

4 hoist room

5 emergency gate slot

d) Bank-tower intake

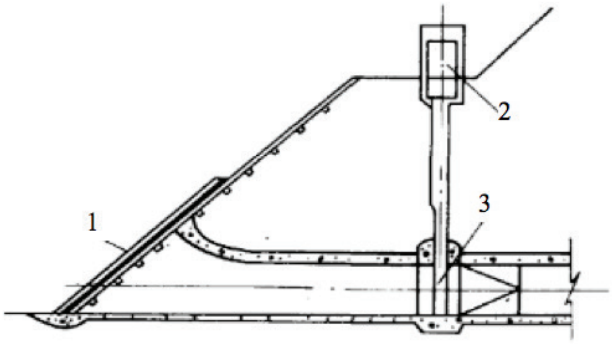

Key

1 trash rack

2 hoist room

3 emergency gate slot

e) Shaft intake

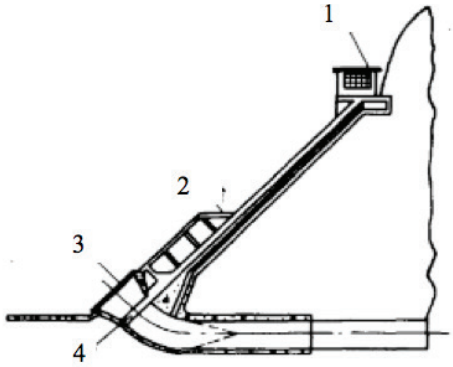

Key

1	hoist room	2	cleaning platform
3	trash rack	4	emergency gate slot

f) Bank slope intake

Figure 6 - Water intake types

8.1.2 The composition of the water intake is as follows:

a) The water intake usually consists of the trash holding section, entrance section, gate section, transition section and the upper structure; meanwhile, the water filling hole and the vent hole shall be arranged. For the hydropower station on the overloaded river, the river with heavy trash and in severe cold regions, the sediment control, pollution prevention or anti-ice structures shall be built respectively.

b) The trash rack, gate, hoist, trash cleaning and observation facilities shall be set up at the water intake.

8.1.3 The layout principles for the water intake are as follows:

a) At various operating water levels, the water intake shall ensure that the water flow is smooth, the flow regime is smooth and steady, the inflow is symmetrical and the water loss is minimized, and the flow should be led in or interrupted according to the operational needs.

b) The through-funnel vortex shall be avoided at the water intake. Otherwise, counteracting measures shall be taken.

c) The equipment for the water intake shall be complete, the gate and hoist shall be flexibly and reliably operated, and the water supply, air supply and traffic facilities shall be unobstructed.

d) The effective sediment control measures shall be taken for the water intake on the overloaded river to prevent the water intake from being clogged by sediment and prevent the bed load entering the diversion system.

e) Effective trash leading, discharge and cleaning measures shall be taken for the water intake on the river with heavy trash to prevent the trash concentrating on the leading edge of the water intake, blocking the trash rack and influencing the operation of the hydropower station.

f)N ecessary anti-ice measures shall be taken for the water intake in the severe cold region.

8.1.4 Sediment, trash and ice prevention measures for the water intake:

a) When selecting the position of the hydropower project, performing the general layout, arranging the flood releasing structure and preparing the operating mode of the reservoir for the overloaded river, it is necessary to consider sediment control as an important issue. The sediment control for the water intake shall be designed to include sediment guiding, retaining, discharging, settling and flushing measures.

   1) Sediment guiding: The project shall be laid out to separate the sediment from the water, divert the water and discharge the sediment to guide the sediment away from the water intake.

   2) Sediment retaining: The sediment retaining sill shall be arranged to retain the bed sediment on the leading edge of the water intake.

   3) Sediment discharging: The reservoir regulation operation scheme shall be optimized to discharge the sediment in front of the water intake to the downstream channel.

   4) Sediment settling: The desilting basin shall be arranged to settle the bed sediment in the basin.

   5) Sediment flushing: The reservoir regulation operating scheme shall be optimized to flush the sediment in the desilting basin into the downstream channel.

b) The water intake on the river with heavy trash should not directly face the main stream carrying the trash. The trash prevention design for water intake shall be performed with full consideration to the trash guiding, discharging and retaining measures. The trash retaining facility shall meet the trash cleaning and water diversion requirements concurrently.

   1) Trash guiding: The guide wall shall be arranged to guide the trash away from the water intake.

   2) Trash discharging: The reservoir regulation operating scheme shall be optimized to discharge the trash in front of the water intake into the downstream channel.

   3) Trash retaining: The trash rack and trash cleaning platform shall be arranged on the leading edge of the water intake, and the trash shall be cleaned with the trash remover.

   4) The opening area of the trash rack shall be controlled by the flow velocity through the rack. The flow velocity may usually be 0.8 m/s to 1.2 m/s.

c) The water intake in frost zones shall be protected from the direct impact of floating ice, and the reservoir regulation operating mode shall be optimized to limit the production of floating ice. The anti-ice design for the water intake shall be performed with consideration to the ice guiding and discharging measures.

8.1.5 Design requirements for the open intake:

a) The non-pressure diversion system usually employs an open intake on bank side.

b) The water intake should be selected on the steady river reach, and should be laid out near the main channel; but it shall not be laid out on the river reach with a wide river bed and scattered mainstream. The water intake shall not be arranged near the junction of tributaries or ravines carrying a lot of bed load. The water intake shall not be arranged in the recirculation zone prone to trash accumulation, and shall be protected from the direct impact of floating ice or drift wood.

c) If the open intake on bank side is used mainly for sediment control, its position should be selected on the concave bank of the curved reach, and the most advantageous position is near the downstream area of

the curve vertex; if the intake is used mainly to prevent trash or ice, it should be selected on the straight reach.

d) The wing walls on both banks of the upstream approach channel of the open intake shall be smoothly laid out to ensure smooth and steady diversion flow.

e) The opening dimension of the open intake shall be selected according to the operation head and design flow, and with consideration given to the flow velocity at the opening, the dimension series of gate and hoist the capacity.

f) The open intake shall be able to introduce sufficient flow for power generation at the minimum upstream operating water level.

g) The floor elevation of the open intake shall be determined in combination with the sediment control and discharging facilities to prevent the bed load entering the head race.

h) The hydraulic calculation of the open intake shall include the calculation of the diversion discharge.

8.1.6 Design requirements for the deep intake:

a) The pressure diversion system usually employs a deep-hole intake on the bank side; the deep-hole intake may be classified as a bank-tower intake, shaft intake and bank slope intake according to their structural features and gate position, and shall be selected in combination with the geological and topographical conditions. The tower intake should not be arranged in the high earthquake intensity area.

b) With regard to the bank-tower intake, the vantage ground shall be fully utilized to reduce the earth-rock excavation and to avoid high slope excavation if possible. The section with good geological condition shall be selected to ensure that the ground is reliable and the hillside is stable.

c) The deep-hole intake shall ensure sufficient submerged depth below the minimum upstream operating water level.

d) The floor elevation of the deep-hole intake shall meet the sediment control requirements, be higher than the balanced elevation of the scour and silting in the reservoir on the leading edge of the opening or be arranged above the elevation of the sediment within the scope of the sediment funnel.

e) The overflow boundary of the entrance section of the pressure water intake should employ the curve close to the streamline or circular curve.

f) The opening area of the pressure water intake should usually not be less than the area of head race behind it.

g) Usually, the service gate (to be opened and closed in flowing water), emergency gate (to be closed in flowing water and opened in still water) and bulkhead gate (to be opened and closed in still water) should be arranged in the gate section of the pressure water intake. The types of the aforesaid gates depends on the type of water intake, the type and length of the head race, whether the gate valve is installed on the head race and the requirement for protection of the downstream structures of the water intake. The filling valve shall be arranged for convenience during operation, inspection and maintenance.

h) The vent hole shall be arranged behind the pressure water intake gate. The upper opening of the vent hole shall be separated from the operating room for the gate, led outside, away from the activity area for personnel and higher than the maximum upstream reservoir water level. When the upper opening leads to the downstream area of the water retaining structure, water spraying in an emergency shall not imperil the safety of the plant. When the waterstop is installed in the front of the gate, the gate shaft may usually be used as the vent hole but its outlet shall be kept unobstructed.

i) The diameter of the connection between the water intake and the pressure head race should be reduced gradually. The length of the transition section should not be less than 1.0 to 2.0 times the head race width (or tunnel diameter).

j) The hydraulic calculation for the pressure water intake shall include the head loss of the water intake, the vent hole area and the water-filling time for the pipeline. The head loss shall include the partial loss of the trash rack, inlet, gate slot and transition section as well as the friction loss.

8.1.7 The calculation requirements for the water intake structure include:

a) The structure at the water intake shall be respectively calculated and verified according to the ultimate limit state and serviceability limit state.

   1) Ultimate limit state: including the calculation of the overall anti-sliding, anti-floating and anti-overturning stability of the structures, the calculation of the compression bearing capacity of the foundation rock on the foundation plane and the calculation of the seismic resistant capacity.

   2) Serviceability limit state: verification of the upstream and downstream tensile stress on the foundation plane of the water intake with the material mechanics method. The tensile stress shall not occur in the vertical normal stress on the foundation of the water intake under the upstream surface standard combination and the tensile stress allowed on the downstream surface should not be more than 100kPa.

b) The stability, strength, rigidity and durability of the water intake structure shall be sufficient.

c) With regard to the dam intake, the stress around the opening shall be calculated by sections in accordance with the operating conditions, dam body load and stress distribution.

d) The tower base and tower body structure of the bank-tower intake may be respectively calculated according to the inverted frame and the frame on the elastic foundation.

e) The gate orifice of the open intake may be designed according to the inverted frame on the elastic foundation or the elastic foundation plate.

f) With regard to the tower intake, the overall floating resistance stability shall be calculated. The tower body may be calculated as per the cylinder or frame according to the contour; the tower base may be designed as per the elastic foundation plate or the inverted frame on the elastic foundation.

g) Under various load combination conditions, the maximum vertical normal stress on the foundation surface of the bank or the tower intake shall not be less than the allowable compression stress of the foundation; the minimum vertical normal stress shall be more than 0. The deep stress of the foundation shall be reviewed when necessary.

8.1.8 Foundation treatment for the water intake:

a) The water intake on the rock foundation shall be placed on the available bedrock; the foundation with partial fracture developed, weak intercalated layer and unstable rock shall be excavated or reinforced to satisfy the requirements for bearing capacity, anti-sliding stability and settlement deformation.

b) The slope of the bank intake shall be cleaned, renovated and equipped with surface drainage measures. The partial unstable rock mass shall be excavated or reinforced.

c) With regard to the water intake on a soft foundation, the corresponding measures shall be taken for foundation treatment.

8.2 Diversion tunnel and surge chamber

8.2.1 Layout principle for the tunnel and surge chamber

a) The route selection of the tunnel shall meet the general layout requirement for the project.

b) The route of the hydraulic tunnel shall be selected through technical and economic comparison of the schemes in accordance with the purpose of the tunnel, and in comprehensive consideration for all kinds of factors including topography, geology, hydraulics, construction, operation, structures along the route, the general layout of the project and the influence on the ambient environment.

c) Under the premise of satisfying the requirement of general layout of the project, the tunnel route should be selected in the region with simple geologic structure along the route, i.e. integral and stable rock mass, hard rock, thick overlying rock, good hydrogeological condition and convenient construction access.

d) The intersection angle between the tunnel route and the rock stratum, the fracture surface as well as the main weak zone should be large, if possible. In the rock mass of an integral block structure, the intersection angle usually should not be less than 30°. In the stratified rock mass, particularly in the high dip angle thin rock stratum with loose interlayer bonding, the intersection angle usually should not be less than 45°.

e) With regard to the tunnel in the region with high ground stress, the tunnel route should be consistent with the direction of maximum horizontal ground stress or the intersection angle between them should be minimized with consideration to the stability of the surrounding rocks.

f) The minimum covering thickness of the rock mass above the tunnel top and on the bank side of the mountain tunnel shall be determined through comprehensive analysis in accordance with the topography and geological conditions, sectional form and size of the tunnel, tunnelling conditions, internal water pressure, lining pattern, permeability characteristics of the surrounding rock and the structural calculation results. The minimum thickness of the rock mass of the pressure tunnel can be calculated according to the formula (26). It should also ensure that the surrounding rock does not produce seepage instability and hydraulic fracturing.

$$C_{\mathrm{RM}} = \frac{F\gamma_W h_s}{\gamma_R \cos\alpha} \quad \text{.....(26)}$$

where

C_{RM} is the minimum covering thickness of the rock stratum;

h_s is the hydrostatic head in the tunnel;

γ_w is the unit weight of the water;

γ_R is the unit weight of the rock;

α is the the inclination of the river shore slope in (°), when α>60°, take α=60°;

F is the empirical coefficient, take 1.3 to 1.5.

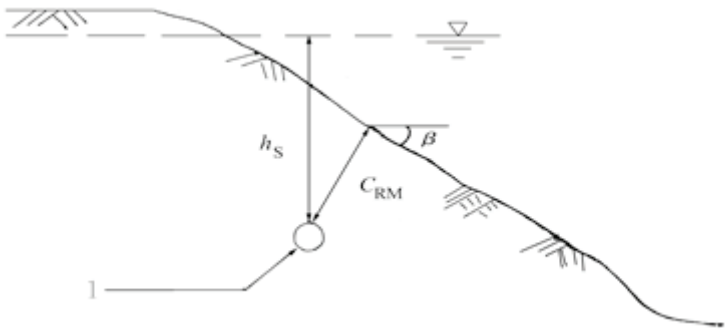

Key

1 high pressure penstock

Figure 7 - Thickness calculations for the overlaying rock of the underground penstock

g) The thickness of the rock mass between two adjacent tunnels should not usually be less than twice the tunnel diameter (or the tunnel width). If the rock mass is favourable, the thickness may be appropriately reduced but shall not be less than the tunnel diameter (or the tunnel width).

h) When the tunnel route passes through the dam foundation, the dam abutment or the foundation of other structures, the thickness of the rock mass between the structure and the tunnel shall be sufficient to satisfy the structural and anti-seepage requirements.

i) When the tunnel route encounters gullies, the gully bypassing or striding schemes shall be compared in their technical and economic aspects in accordance with the topographical, geological, hydrological and construction conditions. When the gully striding scheme is adopted, the striding position shall be reasonably selected, and the engineering measures shall be taken to reinforce the foundation of the structure striding the gully, the connection position of tunnel and the tunnel face slope.

j) The tunnel route shall be straight on the plane if possible. When it is curved, the bending radius of the non-pressure tunnel should not be less than 5 times the tunnel diameter (or tunnel width) and the corner should not be more than 60°; the requirement may be appropriately reduced for the pressure tunnel. The straight section shall be arranged at the beginning and at the end of the bend, and its length should not be less than 5 times the tunnel diameter (or tunnel width).

k) When the vertical curve is arranged for the barrel, the radius of the vertical curve should usually not be less than 5 times the tunnel diameter (or tunnel width) but the requirement may be appropriately reduced for the pressure tunnel. When the vertical curve is to be laid out, the construction method to be adopted shall be considered.

l) The longitudinal gradient of the barrel section shall be selected through technical and economic comparison in accordance with the operational requirements, the connection between the upstream and downstream areas, the bottom elevation of the structure along the route as well as the construction and overhaul conditions. The longitudinal gradient along the route should not vary too much, and usually the zero slope should not be arranged and an adverse slope should be avoided.

m) The case where the free pressure flow and the pressure flow exist alternatively in the tunnel should be avoided. The minimum pressure head inside the tunnel top along the route of the pressure tunnel should not be less than 2m under the most disadvantageous operating conditions.

n) When the tunnel route selected is relatively long, construction adits shall be considered. The number and length of the construction adits shall be determined through analysis in accordance with the topographic condition and geological conditions along the route, the construction method and external traffic situation, and for the benefit of balancing the work amount for different tunnel sections and the requirements for the construction period.

o) The settings for the surge chamber in the pressure diversion tunnel should be determined in light of a technical economical comparison taking into consideration the factors such as the calculation of the unit regulation guarantee and the analysis of the operating conditions, taking into account the role of the hydropower station in the power system, as well as the topography, geology and tunnel layout. The surge chamber should be close to the powerhouse. Unfavourable geological conditions should be avoided for the surge chamber in order to alleviate the adverse seepage effects on its surrounding rock and slope stability.

p) Surge chambers mainly include the simple type, impedance type, water chamber type, overflow type and the differential type. Surge chamber selection should follow the principles below:

   1) Surge waves from the penstock can be effectively reflected;

   2) Surge will be stable in case of small turbine-generator load changes;

   3) In case of large turbine-generator load changes, the water surface in the surge chamber will have low amplitude and fast wave attenuation.

8.2.2 The tunnel and surge chamber structures

a) The sectional shape and dimension of the tunnel shall be determined through technical and economic analysis according to the purpose of the tunnel, the hydraulic conditions, engineering geological conditions, ground stress, lining operating conditions and construction method.

b) The diversion tunnel for power generation usually uses the pressure tunnel. When the change in the upstream water levels is not great and the diversion flow is relatively stable, the non-pressure tunnel may also be used.

c) The pressure tunnel should use the circular section. If the tunnel diameter and the inner/external water pressure are not great, other sectional shapes convenient for construction also can be used.

d) The non-pressure tunnel should employ the straight wall section with a circular arch; the central angle of the circular arch should be 90° to 180°; when the thrust at the springer needs to be increased, the central angle less than 90° also may be acceptable. The height-width ratio of the section shall be selected according to the hydraulic conditions and geological conditions, but should usually be 1 to 1.5. When the water level varies greatly in the tunnel, the large ratio should be used. When the geological conditions are relatively poor, the circular or horseshoe-shaped section may be selected.

e) The height-width ratio of the section shall be adaptive to the ground stress conditions; if the horizontal ground stress is greater than the vertical ground stress, the section with a lesser height but greater width can be used; if the vertical ground stress is greater than the horizontal ground stress, the section with greater height but smaller width can be used.

f) With regard to the relatively long tunnel, multiple section shapes or lining patterns can be used, but there should not be too many varieties of section shapes or lining patterns. The transition section shall be arranged between different sections or lining patterns. The boundary of the transition section shall employ the easy curve, and be convenient for construction. The cone angle of the transition section in the

pressure tunnel should be 6° to 10°, its length should not be less than 1.5 to 2.0 times the tunnel diameter (or tunnel width) and the interval between two transition sections should not be too small.

g) The cross-sectional dimension of the hydropower tunnel shall be determined through analysis in line with the principle of minimizing the sum of the engineering costs for tunnel and the cost of energy loss.

h) The minimum dimension of the cross-section should be determined according to the construction requirements: the inner diameter of the circular section should not be less than 1.8 m, the height of thenon-circular section should not be less than 1.8 m and the width should not be less than 1.5 m. The tunnelwidth shall be greater than 2.2 m in the case where its length is longer than 1.5 km.

i) In the non-pressure tunnel with low flow velocity, the space above the water surface profile should not be less than 15% of the sectional area of the tunnel and its height shall not be less than 0.4m under constant flow conditions if the ventilation conditions are good. Under non-constant flow conditions, the aforesaid values can be appropriately reduced when the surge wave has been considered in the calculation, and the aforesaid value can be appropriately increased for the relatively long tunnel and the tunnel without lining or shotcrete bolt lining.

j) A surge chamber should be underground and anchoring and shotcreting lining, concrete lining, reinforced concrete lining shall be implemented.

8.2.3 Hydraulic calculation

a) The hydraulic calculation for the non-pressure tunnel includes the discharge capacity, connection of the upstream and downstream flows and the water surface profile.

b) The hydraulic calculation of the pressure tunnel includes the discharge capacity, head loss and hydraulic grade line.

c) The head loss of the hydraulic tunnel includes the friction loss and partial loss which shall be calculated respectively.

   1) The roughness coefficient value n selected in the calculation of the friction loss shall be determined through comprehensive analysis in accordance with the construction technology, possible changes after operation and the economic benefits.

   2) The coefficient used in the calculation of partial loss may usually be determined through analysis with reference to the hydraulic data, or decided through testing when necessary.

d) The discharge capacity of the tunnel shall be calculated respectively for the pressure tunnel and the non-pressure tunnel according to the water flow conditions:

   1) Pressure tunnel: to be calculated as per pipe flow.

   2) Non-pressure tunnel: to be calculated as per weir flow for the open inlet; to be calculated as per pipe flow for the deep inlet.

e) With regard to the calculation of the water surface profile for the non-pressure tunnel, it is necessary to first judge the category of the water surface profile, select the control section and then calculate with the stepwise summation process or other method.

8.2.4 The tunnel lining and supporting structure

8.2.4.1 General provisions

a) The purpose of the tunnel supports should be to ensure its surrounding rock stability or to provide the necessary time for the surrounding rock stability. The following supporting modes can be used: anchor rod, anchoring and shotcreting, steel frame, reinforcement mesh shotcrete.

b) Tunnel linings include anchoring and shotcreting lining, concrete lining, reinforced concrete lining, etc., with the following functions:

   1) Strengthening the surrounding rocks, because both the surrounding rocks and the linings undertake the loading jointly;

   2) Smoothing the surrounding rock surfaces to reduce the roughness coefficient;

   3) Improving the anti-seepage capability;

   4) Preventing the surrounding rock from being washed away and damaged due to the flow, atmosphere, temperature and humidity changes.

c) Loads acting on the tunnel lining structure can be classified into the basic loads and special loads according to their functions, and include the self-weight of the lining, the surrounding rock pressure, ground stress, internal water pressure, external water pressure, grouting pressure, construction load, temperature load, seismic load, etc. Loads should be combined into the basic and special combinations according to the possibility of whether the loads occur simultaneously.

d) The surrounding rock pressure acting on the tunnel linings should be determined in accordance with the surrounding rock features, the buried depth of the tunnel, the sectional shape and size of the tunnel, construction method, supporting condition after excavation, lining concrete pouring time and stress redistribution of the surrounding rock during construction.

   1) For surrounding rock I, broken-rock pressure can be ignored in the lining design. Ground stress should be studied according to the tunnel burial depth.

   2) For surrounding rocks I and II, the broken-rock pressure can be estimated according to formula (27) before tunnel excavation:

$$q_v=(0.1\sim0.2)\gamma_R B \qquad (27)$$

where

γ_R is the rock unit weight, in kN/m^3;

B is the tunnel excavation width, in m;

q_v is the pressure of evenly distributed surrounding rocks, is the kN/m^2

Analyse and modify the above estimated values by applying either the block balance method or the finite element method and the supplemented geological data and actual exposed surrounding rocks after tunnel excavation.

   3) For surrounding rocks IV and V, the surrounding rock pressure can be estimated with the loosen media balance theory.

   4) In case the surrounding rocks are supported by combined bolting and shotcreting lining or steel frames reaching a stable status, the surrounding rock pressures acting on the inner concrete lining or reinforced concrete lining can be discounted or ignored.

8.2.4.2 The tunnel with concrete lining and reinforced concrete lining

a) The lining thickness of the concrete and the reinforced concrete (excluding the over-excavation part of the surrounding rocks) shall be determined through analysis according to the strength, anti-seepage and composition requirements, and in combination with the construction method. The concrete lining thickness with single reinforcement should not be less than 0.3m; the thickness of the double layers reinforced concrete lining should not be less than 0.4 m.

b) The anti-crack or crack-limiting requirements shall be increased for the concrete and the reinforced concrete lining according to the surrounding rock conditions, anti-seepage requirements, operating state of tunnel and importance of the project. This requirement may not be increased for the lining used solely for levelling the surface of the surrounding rocks.

c) If the seepage of the internal water will threaten the safety of the surrounding rocks and adjacent structures after the tunnel lining is cracked, the lining shall be designed according to the anti-crack requirements; otherwise, it may be designed according to the crack-limiting requirements. In the latter case, the maximum calculated width of the crack shall not exceed 0.2 mm to 0.3 mm. When the water iscorrosive, the maximum calculated width of the crack should not exceed 0.15 mm to 0.25 mm. If the anti-crack or crack-limiting requirements cannot be met with lining, other measures may be taken.

d) According to the strength and anti-seepage requirements of the concrete, the strength grade of the concrete and the reinforced concrete lining should not be lower than C20.

e) For the concrete and reinforced concrete lining, the deformation joints shall be arranged at the position with obvious changes in geological conditions (such as the positions passing through a relatively large fault or fractured weak zone), the intersection between the well and the cavern, or other positions where significant relative displacement may be produced, and the corresponding anti-seepage measures shall be taken. Only the construction joints need to be arranged in the barrel section with relatively uniform geological conditions of the surrounding rock.

f) The length of the placed section along the tunnel route shall be determined through analysis in accordance with the placing capacity and the thermal shrinkage. Generally, the length may be 6m to 12m. The circumferential joints on the bottom arch and the side/crown arch shall not be staggered.

g) With regard to the circular construction joints in the lining of the non-pressure tunnel, the distribution steel should not usually penetrate the joint surface, the concrete may not be roughened and the waterstop may not be arranged if there is no anti-seepage requirement. With regard to the pressure tunnel and the non-pressure tunnel with anti-seepage requirements, the necessary joint treatment measures shall be implemented for the circular construction joints in the lining according to the specific situation.

h) The longitudinal construction joints in the tunnel lining shall be roughened and arranged at the positions with relatively low tensile stress and shear stress in the tunnel lining structure. When the top arch needs to be lined first in the construction, the reverse joint surface of the abutment shall be properly treated.

i) Certain overlapping length shall be reserved for the connection between the reinforced concrete lining and the steel plate lining (the overlapping length shall be determined according to the water head and not be less than 1m), and the dam ring or other anti-seepage measures shall be arranged on the steel plate lining. With regard to the pressure tunnel with relatively high internal water pressure, the necessity of arranging the water-tight curtain and drainage facility at the tail end of the reinforced concrete lining shall be studied.

8.2.4.3 Tunnels with no lining and tunnels with supporting anchoring and shotcrete

a) The tunnel in the integral, hard rock mass with low permeability may not be lined upon technical and economic analysis if the water flow in the tunnel will not damage the rock, and the outward seepage of internal water will not influence the stability of the adjacent structures, the surrounding rocks and the hillside. Appropriate reinforcement measures shall be taken for the entrance/exit of the non-lining tunnel and the tunnel section with special requirements. The floor of the non-lined tunnel shall be levelled with concrete. The rock collecting traps shall be arranged for the water diversion and power generation tunnel without lining. The position, volume, depth and number of traps may be determined according to the length, geological conditions and hydraulic conditions of tunnel section as well as the cleaning conditions.

b) If the excavation of the non-lining tunnel is performed by the borehole-blasting method, the smooth blasting process shall be used; the quality requirements for smooth blasting include:

   1) Both the radial over-excavation value and the fluctuation difference of the excavated rock surface shall be less than 0.2 m.

   2) The blast hole traces shall be uniformly distributed on the excavation surrounding surface, and the preserving rate of the blast hole traces shall not be less than 70%. The preserving rate of the blast hole traces refers to the percentage of the ratio between the quantity of blast holes with traces and the total quantity of the surrounding blast holes.

   3) There shall be no obvious and visible blasting cracks in the surrounding rocks.

   4) Under-excavation shall not occur.

c) For the tunnel section where the rock mass is relatively integral, and hard but has relatively poor weathering resistance and anti-seepage performance and the outward seepage of internal water will not cause deterioration of the surrounding rocks or result in an adverse sequence, the shotcrete bolt lining may be adopted upon technical and economic analysis.

d) The following shotcrete bolt lining patterns may be selected according to the surrounding rock conditions, operating characteristics of the tunnel as well as the functions and requirements for shotcrete bolt lining:

   1) Shotcrete lining.

   2) Combined lining of the shotcrete and anchor bolt.

   3) Combined lining of the shotcrete, anchor bolt and bar-mat reinforcement.

   4) Combined lining of the shotcrete anchorage and concrete or reinforced concrete.

e) The bonding strength between the shotcrete layer and the surrounding rocks should not be less than 0.8 MPa in the surrounding rocks of category III or higher. The thickness of the shotcrete lining shall not usually be less than 50 mm, and the maximum thickness should not be greater than 200 mm.The shotcrete compression strength should not be lower than 20 MPa.

f) The relatively unstable surrounding rocks should be reinforced with the combined lining of the shotcrete and anchor bolt. The partially unstable rock blocks may be reinforced with a suspended mortar anchor, and the anchor bolt shall be vertical to the rock surface, the length of the bolt in the stable surrounding rock shall usually be 40 to 50 times the anchor bolt diameter and the anchor bolt diameter should not be less than 16 mm. With regard to the surrounding rocks with relatively poor integral stability, the rockbolt system should be used. The diameter of the anchor bolt should not be less than 16 mm and the length should usually be 2 m to 4 m; and the following provisions shall be observed:

1) The anchor bolts shall be vertical to the main structural surface; when the main structural surface is not obvious, they may be vertical to the contour line around the tunnel.

2) The positions on the surrounding rock surface should be arranged in quincunx.

3) The spacing between the anchor bolts should usually not be more than 1/2 of its length, and shall not be more than 1.25 m for the unfavourable surrounding rock.

g) The surrounding rocks with developed structure and fissures should be lined in combination form of the shotcrete, anchor bolt and bar-mat reinforcement. The layout of the bar-mat reinforcement shall comply with the following provisions:

1) The diameter of the longitudinal reinforcement of the bar-mat reinforcement shall usually be 6mm to 10 mm and the diameter of the circumferential reinforcement shall usually be 6 mm to 12 mm.

2) The mat spacing shall be 200 mm to 300 mm.

3) The thickness of the shotcrete protective layer for the bar-mat reinforcement shall not be less than 50 mm.

4) The connection between the bar-mat reinforcement and the anchor bolt should be fixed by welding.

5) The intersection of the bar-mat reinforcement shall be firmly fastened (it is recommended to weld them together at the interval and fasten them together at the interval).

h) The entrance/exit of the tunnel with shotcrete anchorage, and the positions in front and behind the sluice chamber shall be lined with concrete or reinforced concrete; the lining length shall be determined according to the specific conditions, and shall not usually be less than 2 to 3 times the tunnel diameter (or tunnel width).

8.2.4.4 The grouting, anti-seepage and drainage of the tunnel lining

a) The top of the concrete and reinforced concrete lining shall be backfilled and grouted. The scope, hole spacing, row spacing, grouting pressure and grout density of the backfilling and grouting shall be determined through analysis according to the type of lining structure, working conditions in the tunnel and the construction method.

b) The scope of the backfilling and grouting should usually be within 90° to 120° of the central angle of the top arch, the spacing between holes and rows should usually be 2 m to 6 m, the grouting pressure shouldusually be 0.2 MPa to 0.3 Mpa and the depth of the grouting hole in the surrounding rocks shall be at least 50 mm.

c) The consolidation grouting of the surrounding rocks shall be determined through technical and economic comparison. The parameters of the consolidation grouting may be determined through engineering analogy or field test. Usually the spacing between the rows should be 2 m to 4 m and at least 6 holes shouldbe arranged on one row and laid out symmetrically. The hole depth in the surrounding rocks should beabout the length of the tunnel radius. The grouting pressure should be 1.5 to 2.0 times the internal waterpressure.

d) In the anti-seepage and drainage design of the tunnel, the plugging (such as lining and grouting), retaining (such as anti-seepage curtain) and measured draining (such as the drainage holes and drainage gallery) shall be selected through comprehensive analysis according to the engineering geology, hydrogeology and design conditions of the surrounding rocks along the route of the tunnel and with allusion to the specific situation for the purpose of improving the lining structure and working condition of the surrounding rocks.

e) The drainage holes may be arranged in the non-pressure tunnel. The spacing between drainage holes, the spacing between rows and the hole depth shall be determined through analysis according to the hydrogeological conditions. Generally, the spacing between holes and the spacing between rows should be 2 m to 4 m, and the hole depth in the rock stratum should be 2 m to 4 m.

f) With regard to the pressure tunnel whose lining design is controlled by the external water pressure, the drainage measures should be taken to reduce the external water pressure intensity, but the outward seepage of internal water shall be avoided.

g) With regard to tunnels without concrete lining but only with shotcrete bolt lining, necessary anti-seepage measures shall be taken at the exit from the pressure tunnel at the position where the covering thickness of the surrounding rock above the tunnel top is less than the internal water pressure head for the tunnel section with surrounding rocks of categories IV and V, and at the position where the thickness of the surrounding rocks close to the hill bank is less than 1.5 times the internal water pressure head; meanwhile,attention shall be paid to the instability of the surrounding rock and hillside.

8.3 Water diversion channel and the forebay

8.3.1 General provisions

8.3.1.1 If the levee crest height of the self-regulating channel remains unchanged along the channel length and the channel bottom extends along the channel at a certain gradient, the overflow weir may not be arranged at the end of the channel. With regard to the self-regulating channel, the bulkhead gate should be arranged at the water intake. If the levee crest elevation of the non-self-regulating channel reduces along the channel length, and its gradient is consistent with the channel bottom gradient, the release structure such as the overflow weir should be arranged in the forebay at the tail end of the channel. With regard to the non-regulating channel, the service gate and the bulkhead gate shall be arranged at the water intake (or the gate slot may be reserved).

8.3.1.2 With regard to the selection of the water diversion channel types, the self-regulating channel, non-self-regulating channel or channel mixed with self-regulating and non-self-regulating functions shall be selected through technical and economic comparison in combination with the topographical, geological, construction and operational conditions as well as the general layout of the project.

8.3.1.3 Self-regulating channel may be adopted if the following requirements are met.

a) The water level change of the channel water intake is insignificant, the channel is relatively short, the longitudinal gradient of the channel bottom is relatively insignificant and most of the channel is excavated.

b) The condition for the building release structure is unavailable.

c) The operation requires using the channel to store water as the regulating capacity of the hydropower station.

d) In the design of the water diversion channel and the forebay, the issues on flood control, trash prevention, anti-seepage, sediment prevention and ice resistance shall be handled properly.

e) With regard to the channel section near the water intake, the protection scope and the corresponding engineering measures shall be determined for the flood control of outer slope according to the flood discharge situation.

8.3.2 Layout principle for the channel and the forebay

8.3.2.1 The route of the channel should be straight if possible, and be selected at the place where the excavation and filling are basically balanced; if impossible, the route shall be kept away from the section with extensive filling and deep excavation and the curve should not be too sharp. With regard to the lining channel, the curve radius shall not be less than 2.5B (B refers to the water surface width of the channel); with regard to a channel without lining, the curve radius shall not be less than 5B.

8.3.2.2 In the mountainous area and hilly area, the channel's route shall be laid out along the contour line to avoid excessive excavation and filling volume. When the channel goes through a valley or ridge, the extensive filling, deep excavation, bypassing, aqueduct and tunnelling schemes shall be compared, and the optimal one selected. To reduce the work amount, the channel shall be orthogonal to the road and the river.

8.3.2.3 The route of the channel shall be kept away from the region with serious leakage, quicksand, mud land, landslides and a rock stratum that is difficult to excavate. Several schemes may be proposed and compared when necessary, for example, keeping away from the landslide area by bypassing and backfilling, reducing seepage with anti-seepage measures, crossing quicksand area with box culvert and ensuring safe operation of the channel with concrete or reinforced concrete lining.

8.3.2.4 To improve the construction conditions and ensure the engineering quality, the transportation, water and power supply, mechanical construction site, soil borrowing and spoil ground for the construction shall be comprehensively considered.

8.3.3 Layout of structures on the channel

8.3.3.1 The release structure should employ the side weir type.

8.3.3.2 The side weir should be laid out in the forebay (or at the position close to the forebay) or the position where the channel crosses the gully.

8.3.3.3 The hydraulic design of the weir shall meet the following requirements:

a) With regard to the water diversion channel, the crest elevation of the side weir shall be 0.1 m to 0.2 m higher than the overflow water surface elevation when the hydropower station operates normally atdesign flow.

b) The weir crest length and average water head in front of the weir should be determined through calculation and comparison.

c) The water shall flow freely over the weir; the side channel or steep channel for water discharge and necessary energy dissipation and the erosion control facilities should be laid out behind the weir according to the actual conditions.

d) The weir with a practical cross-section or the trapezoidal weir may be used, and the vacuum profile weir may also be used.

e) The guide walls on both sides of the side weir shall meet the requirement of keeping the water flow smooth.

8.3.3.4 To meet the overhaul requirement of the channel, the drainage holes shall be arranged. The drainage holes should be combined with the sediment discharging, irrigation, and water supply facilities.

8.3.3.5 When the channel is relatively long and a lot of trash enters the channel along the route, additional trash retaining and cleaning facilities should be arranged at the appropriate positions.

8.3.3.6 Effective sediment discharging facilities such as the sediment discharging vortex pipe should be arranged in the channel to handle the sediment (mainly bed load) in the channel.

8.3.3.7 Necessary safety and traffic facilities shall be arranged along the route of the water diversion channel.

8.3.4 Design of the longitudinal gradient and cross-section of the channel

8.3.4.1 The longitudinal section design of the channel include: determining the longitudinal gradient of the channel, the normal water line, minimum water line, maximum water line, elevation of the channel bottom, ground level along the route of channel and the elevation of the levee crest.

8.3.4.2 When the longitudinal gradient of the channel is selected, attention shall be paid to the following:

a) Ground gradient: The longitudinal gradient of the channel shall be close to the ground gradient as much as possible to avoid deep excavation and extensive filling.

b) Geological condition: With regard to the channel prone to scouring, the longitudinal gradient should be gentle; with regard to the channel with favourable geological conditions, the longitudinal gradient may be appropriately increased.

c) Flow magnitude: When the flow is strong, the longitudinal gradient should be gentle, when the flow is low, the longitudinal gradient should be slightly steeper.

d) Sediment concentration: When the sediment concentration of the water flow is low, attention shall be paid to scouring prevention, and the longitudinal gradient should be gentle; when the sediment concentration is high, attention shall be paid to the silting prevention, and the longitudinal gradient should be steep.

e) Waterhead.

8.3.4.3 The section size of the channel shall usually be determined through hydraulic calculation according to the operating requirements. The section shall be designed according to the design flow and checked according to the increased flow.

8.3.4.4 Reasonable channel section design shall usually meet the following requirements:

a) The water-bearing capacity shall be sufficient to satisfy the water demand.

b) The water level shall be sufficient to satisfy the requirement for irrigation by gravity.

c) The flow velocity in the channel shall be suitable to avoid scouring or silting of the channel and realizing a periodical scouring and silting balance.

d) The side slope shall be stable to ensure safe operation of the channel.

e) The section form shall be reasonable to reduce seepage and other losses, and improve the water utilization coefficient.

f) The comprehensive utilization requirements shall be met, and the channel shall be dedicated for one purpose and may be used with multiple functions.

g) The work amount shall be minimized to effectively reduce the total investment of the project and realize the greatest project benefit.

8.3.4.5 The channel usually employs the trapezoid cross-section which is convenient for construction and can ensure the stability of the channel side slope. For the convenience of operational management of the channel and channel safety, the levee crest shall reserve a certain width and safety marginal height.

8.3.4.6 The selection scope of the design flow velocity for the water diversion channel of the hydropower station: the flow velocity should be 1 m/s to 2 m/s for the lined channel and be 0.6 m/s to 0.9 m/s for the earthchannel.

8.3.4.7 The water diversion channel of the hydropower station shall be lined with durable materials with good anti-seepage performance according to the local conditions.

8.3.5 Forebay design

8.3.5.1 The forebay shall be composed of a front chamber, intake chamber, pressure wall, release structure, sediment discharging, ice retaining and ice discharging structures. In the plane layout, the centreline of the water intake of the hydropower station should coincide with the centreline of the water diversion channel.

a) The intake chamber refers the enlarged and deepened part in front of penstock water intake and usually is wider and deeper than the channel; the channel should be connected to the forebay body with transitional diffuser (front chamber) so as to ensure smooth water flow, small head loss and avoidance of vertex.

b) The pressure wall refers to the gate wall (water-retaining wall) of the penstock water intake.

c) The release structure is used to discharge the surplus inflow in the channel and prevent the water in the forebay from overflowing the levee crown.

d) The ice retention, the ice chute and scouring gallery are used to prevent the hazards of sediment and ice.

8.3.5.2 The layout of the forebay shall be compact and reasonable to ensure smooth water flow, flexible and reliable operation and a safe and economical structure.

8.3.5.3 The forebay should usually be laid out on the upper part of the steep slope; special attention shall be paid to the foundation stability and anti-seepage problems; under the premise of ensuring forebay stability, the forebay should be as close to the powerhouse as possible to shorten the length of the penstock.

8.3.5.4 To smooth out the water flow and avoid the vertex, the plane diffusion angle β of the channel connecting to the forebay should not usually be more than 10° to 15°.

8.3.5.5 For the convenience of settling and discharging the sediment, and preventing harmful sediment entering the intake chamber, the height of the floor at the tail end of the front chamber shall be 0.5m to 1.0m lower than the floor elevation of the intake chamber.

8.3.5.6 When the center line of the channel is inconsistent with the center line of the penstock, the gentle connection curve may be adopted and the guide wall may be additionally arranged to prevent the vortex from occurring in the front chamber, increasing the loss and the local sedimentation. The width of the front chamber should be about 1.0 to 1.5 times the intake chamber width, and the length should be 2.5 to 3.0 times the width.

8.3.5.7 When there are more than two penstocks, the intake chamber shall be separated into several independent intake chambers with separating piers; the trash rack, bulkhead gate, service gate, hoist, bypass pipe, vent hole and service bridge should be arranged in each intake chamber.

8.3.6 Hydraulic calculation

8.3.6.1 The hydraulic calculation includes:

a) Hydraulic calculation of the steady flow and unsteady flow of the water diversion channel and the forebay system.

b) Hydraulic design and energy dissipation calculation for the release structure.

c) Hydraulic design and calculation for the desilting structure.

d) Hydraulic calculation of other overflowing structures.

8.3.6.2 The design flow of the channel shall include the maximum diversion flow of the hydropower station as well as the leakage and evaporation loss of the channel. The design flow of the corresponding channel section may be increased when necessary.

8.3.6.3 The water level of the hydropower station during its normal operation at design flow shall be used as the normal water level of the forebay. In this case, the channel system shall operate in the uniform flow or nearly uniform flow regime.

8.3.6.4 The maximum water level in the forebay and the channel shall be determined according to the maximum surge water level when the hydropower station casts off all the loads suddenly in the normal operating process at design flow. With regard to the self-regulating channel, it refers to the maximum surge water level at the end of the channel obtained from the non-steady flow calculation; with regard to the non-self-regulating channel, it refers to the corresponding water level when the overflow weir discharges the maximum flow.

8.3.6.5 The minimum water level in the forebay and the channel shall be determined as per any of the following conditions.

a) The minimum water diversion and power generation flow in the dry season of the design frequency, when the channel operates normally.

b) When the channel is required to discharge ice in wintertime.

c) Low water level when the water level in the forebay drops suddenly due to sudden increase of the turbine load; the minimum operating water level determined according to the operational requirements of the hydropower station shall ensure the submerged depth required by the intake chamber.

8.3.6.6 When the hydropower station is under normal operating conditions of the design flow, the prismoidal channel shall be calculated according to the uniform flow of open channel; with regard to the non-prismoidal channel, it shall be calculated according to the steady gradually varied flow of the open channel.

8.3.7 Channel anti-seepage design

8.3.7.1 The channel anti-seepage materials usually include soil, cemented soil, masonry, membrane, bituminous concrete and concrete among which lime soil, three-element mixture, four-element mixture and cemented soil should be used for the channel anti-seepage works in the mild region.

8.3.7.2 The channel anti-seepage works shall be in line with the principles of adjusting the measures to the local conditions and using local materials. The construction quality shall be guaranteed, and the anti-seepage design requirements shall be met. Meanwhile, the management shall be enhanced to ensure the designed service life and improve the benefits.

8.3.7.3 The channel anti-seepage works should be constructed during the warm seasons.

8.3.7.4 The soil material for the channel anti-seepage works shall meet the provisions of Table 21.

Table 21 - Technical requirements of anti-seepage soil material

Items	Cohesive soil, burnt-on sand mixture anti-seepage	Lime soil, three-element mixture and four-element mixture anti-seepage	Membrane anti-seepage soil protective layer and transition layer	Cemented soil anti-seepage
Clay grain content (%)	20~30	15~30	3~30	8~12
Sand grain content (%)	10~60	10~60	10~60	50~80
Plasticity index I_p	10~17	7~17	1~17	/
Maximum particle size of the soil particles (mm)	<5	<5	<5	<5
Organic content (%)	<3.0	<1.0	/	<2.0
Soluble rock content (%)	<2.0	<2.0	<2.0	<2.5
Content of caliche nodule, tree root and grass root	Unacceptable	Unacceptable	Unacceptable	Unacceptable

8.3.7.5 The benchmark mix proportion of soil material should meet the following requirements.

a) The mix proportion of lime soil may usually be lime: soil=1:3 to 1:9. When used, the lime dosage shall be increased or decreased as appropriate according to the length of the lime storage period, and its variation scope should be controlled within ±10%.

b) The mix proportion of the three-element mixture usually may be lime: total weight of the soil and sand=1:4 to 1:9, where the soil weight should be 30% to 60% of the total weight of soil and sand; with regard to the clay soil with a high liquid limit, the soil weight should not be more than 50% of the total weight of soil and sand.

c) When the four-element mixture is used, it may be prepared by adding 25% to 35% cobble or macadam on the basis of the mix proportion of the three-element mixture.

d) In the clay sand mixture, the ratio between clay soil with a high liquid limit and the total weight of the sand and soil should be 1:1.

8.3.7.6 The optimum moisture content of the lime soil and the three-element mixture may be selected according to the following requirements.

a) It may be 20% to 30% for the lime soil.

b) It may be 15% to 20% for the three-element mixture and the four-element mixture.

c) It should be controlled within ±4% of the plastic limit for the plain soil and burnt-on sand mixture.

8.3.7.7 The frost resistant grade of the cement should not be less than F12. The cement dosage should be 8% to 12% and the anti-seepage coefficient should not be more than 1×10^{-6} mm/s.

8.3.7.8 The membrane should be the dark plastic membrane with a thickness of 0.2 mm to 0.6 mm. In the coldregion and severe cold region, the polyethylene membrane may be used in preference.

8.3.7.9 The thickness of the anti-seepage structure of the channel should be determined according to Table 22.

Table 22 - Suitable thickness of anti-seepage structure of channel

Category of anti-seepage structure		Thickness (mm)
Soil material	Clay (tamped)	≥300
	Lime soil and three-element mixture	100~200
Cemented soil		60~100
Masonry	Dry laid cobble	100~300
	Stone blocks with cement mortar	200~300
	Dressed stone with cement mortar	150~250
	Slabstone with cement mortar	>30
Buried membrane material (protective layer of soil material)	Plastic film	0.2~0.6
	Cushion layer (clay, sand and lime soil) below membrane material	30~50
	Protective layer of soil material above membrane (tamped)	400~700
Bituminous concrete	Cast-in-place	50~100
	Precast + paving	50~80
Concrete	Cast-in-place (without reinforcement)	60~120
	Cast-in-place (equipped with reinforcement)	60~100
	Precast + paving	40~100
	Construction by injection process	40~80

8.4 Channel structure

8.4.1 Aqueduct

8.4.1.1 General provisions

a) The aqueduct is an open flow overhead water conveyance structure of the channel for crossing the river, ditch, channel, road or low-lying land, and is usually composed of the inlet/outlet connection section, the aqueduct body and the structural support. Its working conditions and design requirements shall meet the requirements for the planning and designing of the entire diversion works.

b) The layout of the aqueduct shall be determined through technical and economic comparison according to the topographical and geological conditions, project scale and general layout requirement of the project.

c) The aqueduct shall be selected in the region with excellent topographical and geological conditions for the convenience of shortening the aqueduct body length, reducing the foundation quantities and lowering the pier bracket height.

d) The axis of the aqueduct shall be short and straight, the inlet and outlet shall avoid sharp turns and shall be laid out on the excavated channel.

e) With regard to the aqueduct crossing the river, the aqueduct site shall be stable and the water flow shall be smooth.

8.4.1.2 Structural of the inlet/outlet sections

a) The layout of the inlet/outlet sections shall ensure that the water flow of the channel could enter the aqueduct smoothly, avoid scouring and reduce head loss.

b) A certain length on the channels in front of and behind the aqueduct inlet and outlet shall be straight and smoothly connected to the aqueduct body, and shall avoid sharp turns on the plane layout to prevent deterioration of the water flow condition, influencing the normal water conveyance and causing the scouring phenomenon.

c) To smoothly connect the water flow and adapt to the changes in the flow cross-section, the transition sections should be arranged at the inlet and outlet of the aqueduct. The patterns of the transition sections mainly include the warped surface, inverted wing wall and splayed wall.

d) The flow regime in the inlet and outlet sections is relatively complex. To prevent hazards arising from scouring, reliable river bottom protection and slope protection shall be arranged.

8.4.1.3 Structural of the aqueduct body

a) The depth-to-width ratio of the flow cross-section of the aqueduct usually should be h/B=0.6 to 0.8.

b) The span and supporting type (simple support or double cantilever) of the aqueduct should be determined according to the flow, and the topographical and geological and construction conditions.

c) The span of the aqueduct with the simply supported beam should usually be 10 m to 15 m; the length ofeach section of the aqueduct with double cantilever should usually be 20 m to 30 m; according to the actualsituation, the aqueduct may be laid out into the aqueduct with the equal span and double cantilever, theaqueduct with the equal bending moment and the double cantilever or the aqueduct with the unequalspan, unequal bending moment and double cantilever.

d) The thickness of the side wall and floor of the aqueduct shall meet the strength and anti-crack requirements, and be determined through stress analysis.

    - The side wall should usually be used concurrently as the longitudinal beam, and shall meet the longitudinal stability requirement.
    - With regard to the rectangular aqueduct with cross bar, the ratio between the side wall thickness t and the wall height H should usually be t/H=1/12 to 1/16; with regard to the ribbed aqueduct without cross bar, the wall thickness may be appropriately reduced, but should not usually be less than 150mm; with regard to the rib-less aqueduct without cross bar, the side wall thickness shall be appropriately increased, should usually be variable but the wall top thickness should usually not be less than 150mm.
    - The thickness of the aqueduct floor should usually be the same as that of the side wall bottom; with regard to the aqueduct with multiple longitudinal beam, the floor thickness may be less than the thickness of the side wall bottom.
    - Supplementary angle should be additionally added at the intersection between the side wall and the floor. The width and height of the supplementary angle should usually be 200mm to 300mm.

e) The spacing between the cross bars of the rectangular aqueduct with cross bar should be 1.5 m to 2.5 m and the side length of the cross section should be about 200 mm.

f) The spacing between the ribs of the ribbed aqueduct with cross bar shall meet the requirement that the side wall and the aqueduct floor become two-way slabs.

- The ratio H/L_1 of side wall height H and the spacing interval of ribs L_1 and the ratio B/L_1 of aqueduct floor width B and the spacing interval of ribs L_1 should usually be 1.0 to 2.0.
- The rib width should usually not be less than the thickness of the side wall and the aqueduct floor, and the net thickness of the rib should usually be equal to or slightly more than the rib width.
- If the side wall and the aqueduct floor need to become the supporting plate with four fixed edges, the top and bottom thickness of the side wall should be partially increased, and the rigidity of the side wall top, bottom and the rib shall be more than 8 times the slab rigidity.

g) The extended sidewalk cantilever slab should usually be arranged on the top of the side wall of the rectangular aqueduct without cross bar, the slab thickness should be 60 mm to 100 mm and the slab widthshould be 700 mm to 1 000 mm. The sidewalk slab of the aqueduct with cross bar usually should be placedon the cross bar.

h) The thickness of the side wall, the top slab and the floor of the box-type aqueduct should mostly be equal, and shall not usually be less than 300 mm.

i) The safety marginal height of the side wall shall be determined according to the flow and the overall planning requirement, and should usually be equal to or slightly more than the safety marginal height of the upstream and downstream channels.

8.4.1.4 Hydraulic calculation

a) The hydraulic calculation of the aqueduct is performed for the purpose of determining the flow cross-section shape and the dimension of the aqueduct, the longitudinal gradient of the aqueduct bottom and the elevation of the inlet/outlet, and verifying whether the head loss meets the planning requirement of the channel system.

b) The flow cross-section dimension of aqueduct usually is designed as per the design flow, checked as per the maximum flow and calculated with hydraulic formula.

c) When the length of the aqueduct $L \geq (15 \text{ to } 20)h$ (h refers to the water depth in the aqueduct), the dimension should be calculated as per the open channel uniform flow formula. When $L < (15 \text{ to } 20)h$, the dimension may be calculated as per the formula for submergence of the broad-crested weir.

d) When the hydraulic calculation is performed for the aqueduct, the longitudinal gradient of the aqueduct should be determined first. Generally, in the preliminary formulation, i=1/500 to1/1 500, and flowvelocity in the aqueduct is 1 m/s to 2 m/s.

8.4.2 Inverted siphon

8.4.2.1 General provision

a) The inverted siphon is a water conveyance structure under pressure, which usually is composed of the inlet section, pipe body section and outlet section. Its working condition and design requirement shall meet the requirement of the planning design for the entire diversion works.

b) The pipeline layout shall be determined through technical and economic comparison according to the topographical and geological conditions, project scale and general layout of works.

c) The pipeline shall be selected in the region with excellent topographical and geological conditions, and shall be kept away from the landslide, collapse or areas prone to underground water hazards.

d) On the vertical face, the pipeline shall not protrude upwards if possible. If this is impossible to avoid, the vent valve shall be arranged on the appropriate positions of the pipeline.

e) When the pipeline is laid out, the scouring, draining and manual overhaul facilities should be arranged. The moving joints convenient for the removal and replacement of the pipe sections shall also be laid out for the lifted pipeline.

f) The pipeline and inlet/outlet sections shall be laid on the excavated foundation if possible to reduce settlement, seepage and landslide.

g) The curve radius of the circular pipeline should not be less than 3 times the pipe diameter. The plane curve and the vertical curve close to each other should be combined into a three-dimensional curve. The bend and the transition section close to each other should be combined into a transition bend section.

h) In the cold region, necessary anti-freezing measures shall be taken according to the anti-freezing design requirement.

i) The burial depth of the buried pipe shall meet the following requirements:

   1) Thermal insulation: The pipe top shall be at least 0.5 m to 0.8 m beneath the soil layer.

   2) Anti-freezing: The pipe top shall be at least 1.0 m to 1.5 m beneath the layer of frozen soil.

   3) Anti-scouring: The pipe top shall be at least 0.5 m beneath the scouring line.

   4) Buried pipe beneath road or channel: The pipe top shall be at least 1.0m beneath the road surface or channel bottom.

   5) Plough layer: The pipe top shall be below the plough layer (the depth of the tractor-ploughed plough layer is usually 0.6 m to 1.0 m).

8.4.2.2 Structural of the inlet/outlet sections

a) In the inlet/outlet sections, the structures including the grit basin, sediment retaining sill, scouring sluice, water release gate, control gate, stilling basin, trash rack, and bell-mouth and transition section shall be laid out according to the specific engineering requirements.

b) The type and elevation of the structures at the inlet/outlet shall ensure that the water flow at the pipeline inlet and outlet is submerged flow to prevent the hydraulic jump and funnelling vortex from bringing in air when different flows pass through them. The boundary shall be as smooth as possible to reduce the head loss.

c) In general, the inlet and outlet are designed under the condition that the design flow is submerged flow. However, another non-submerged race may occur when other flows pass through; thus, the structure connections like the stilling basin and the control gate may be arranged at the inlet and outlet to improve such flow regime.

8.4.2.3 Structural of the pipe body section

a) The design of the pipe body section includes the selection of the sectional pattern of the pipeline as well as the dimension, quantity and material of the pipeline.

b) The anchor block shall be arranged at the bend of the pipeline.

   - When the straight section of the pipeline is relatively long, the anchor blocks shall usually be arranged every 150m to 200m.

- When the pipeline is laid out on the slope, the anchor blocks shall be arranged every 50m to 100m to prevent the pipe body sliding.
- The spacing between anchor blocks shall be determined through calculation in accordance with topographical and geological conditions.

c) The expansion-subsidence joints shall be arranged between the pipe sections. Therefore, the length of the pipe section is the spacing between the expansion-subsidence joints of the pipeline.

d) Type of joint between pipe sections: With regard to the cast-in-place reinforced concrete pipe, it mainly includes the abutment joint and cup joint, where the former is used for the pipeline with relatively low head; the socket and spigot joint is mostly used for precast pipe and pre-stressed pipe.

e) The length of the cast-in-place concrete pipe section is usually 15 m to 20 m on soil foundation and is 10 m to 15 m on rock foundation. The length of the precast concrete pipe section is usually less than 5m.

8.4.2.4 Hydraulic calculation

a) Main tasks for hydraulic calculation of the inverted siphon:

1) To determine the flow cross-section of the pipeline and quantity of pipeline.

2) To determine the layout and dimension of the inlet/outlet sections, as well as the elevations at various positions.

3) To verify whether the discharge capacity, head loss and water surface connection meet the design requirement.

b) The flow velocity in the inverted siphon shall be selected through technical and economic comparison according to the allowable head loss value and the requirement for no silting in the pipe.

1) Concrete pipe: When the design flow passes through it, the average flow velocity in the pipe should usually be 1.5 m/s to 3.0 m/s and the maximum velocity may reach 4 m/s; when the minimum flowvelocity is calculated as per the minimum flow, the flow velocity in the pipe shall be greater than thesediment-carrying flow velocity.

2) Steel pipe: The flow velocity should usually be 4 m/s to 6 m/s.

c) The head loss of the inverted siphon includes the local head loss and the frictional head loss. The local head loss includes the losses occurring at the trash rack, inlet, gate slot, transition section, bend, pipe joint and the outlet.

d) The water flow in the inverted siphon is the pressure pipe flow so that its discharge capacity in the pipeline shall be calculated according to the pressure pipe flow formula.

e) The inlet and outlet of the inverted siphon will usually be designed as per the design flow and the submerged flow, and then the following two working conditions will be verified:

1) Whether the flow at the inlet and the outlet is still submerged flow when medium or small flow passes through it.

2) Whether the water level elevation of the inlet/outlet channels and the channel and dike top meet the safe operation requirements when large flow passes through it.

When the flow velocity at the pipeline outlet is relatively high, the situation of the water surface connection also shall be verified when the flow increases. When the repelled downstream hydraulic jump occurs, the connection structure of the still basin must be arranged at the outlet. If the head difference between the

inlet and outlet channels is greater than the total head loss of the pipeline when medium or low flow passes through it, the water surface at the inlet may cause the hydraulic jump when the flow drops in the pipe, lead to pulsation and aeration, and influence safe operation. In this case, the inlet and outlet design shall be corrected according to the total head loss.

8.4.2.5 Structural calculation

a) The load combination for the structural design of the inverted siphon shall be comprehensively considered according to the engineering layout as well as the most disadvantageous conditions which might occur during the operation period, as shown in Table 23.

Table 23 - Load combination for structural calculation of pipeline

Pipe-line Type	Load combination	Basic load									Special load		Re-marks
		Dead weight	Full pipe water weight	Design internal water pressure	external water pressure	Soil pressure	Ground load	Temperature load	Snow load	Counter-force of support	Check internal water pressure	Seismic force	
Ex-posed pen-stock	Basic combination	√	√	√				√	√	√			
	Special combination (I)	√	√					√	√	√	√		
	Special combination (II)	√	√	√				√	√	√		√	
Buried pipe	Basic combination (I)	√	√	√		√	√	√	√	√			
	Basic combination (II)	√				√	√	√	√	√			Empty pipe
	Special combination	√	√			√	√	√		√	√		
Buried pipe in river bed	Basic combination (I)	√	√	√	√	√				√			
	Basic combination (II)	√			√	√				√			Pipe-line over-haul period
	Special combination	√	√		√	√				√	√		

b) The structure of the reinforced concrete pipeline shall be designed according to the requirement that no crack is allowed, and anti-crack and anti-seepage measures shall be taken.

8.5 Penstock

8.5.1 General provisions

8.5.1.1 The route of the penstock shall meet the general layout requirements, and be determined through technical and economic comparison with consideration given to the topographical and geological conditions.

Generally, the route should be short and straight so as to make the water flow smoothly, the head loss minimal, and the construction and operation safe and convenient.

8.5.1.2 The quantity of penstocks shall be determined through technical and economic comparison according to the number of units, the length of the pipeline, installation stages of the units, fabrication and installation level, transportation condition, topographical and geological conditions, operational mode of the hydropower station and its position in the electrical power system.

8.5.1.3 The pipe diameter shall be determined through technical and economic comparison. Several pipe diameters may be provided according to the layout and the inner pressure variation. But the diameters should not vary too much.

8.5.1.4 The top of the penstock shall be at least 2m below the minimum pressure line.

8.5.1.5 With regard to the exposed penstock, penstock in dam and underground penstock without water intake valve in front of the turbine, the fast gate valve and necessary overhaul facilities must be arranged at the head end of the penstock. With regard to the underground penstock, the emergency gate valve shall be arranged at the head end if the head race from the water intake to the penstock is relatively long, the pressure in the penstock is relatively high and the burial depth is not deep.

8.5.1.6 The overflow protection device should be arranged for the penstock.

8.5.1.7 The fast gate valve or emergency gate valve at the head end of the penstock shall be equipped with remote (central control room) and local operation devices which shall have a reliable power supply.

8.5.1.8 The vent hole (well) or vent valve shall be arranged on the downstream side close to the fast gate valve and the emergency gate valve, and the vent hole shall not be blocked by the outlet water flow of the filling valve. The upper end of the vent hole should be outside the hoist room and higher than the verified flood level.

8.5.1.9 The curve radius of the penstock should not be less than 3 times the pipe diameter. The plane curve and vertical curve close to each other should be combined into a three-dimensional curve; the bend and the reducing pipe close to each other should be combined into a reducing bend.

8.5.1.10 The drainage facility should be arranged at the lowest point of the penstock.

8.5.1.11 The composition of the penstock should meet the following provisions:

a) In addition to the structural analysis requirement, the minimum thickness (including thickness of the anti-corrosion layer) of the pipe wall also should meet the requirements of the manufacturing process, the installation and transportation, and ensure necessary rigidity. The minimum thickness of the pipe wall should not be less than (D/800)+4 mm (D refers to the pipe diameter, in mm) nor less than 6mm.

b) On the position with change in the pipe wall thickness, the outer diameter of the exposed penstock should remain unchanged, the inner diameter of the buried penstock should remain unchanged and the thickness difference of the pipe wall should be 2mm. When steel plates of different thicknesses are welded, the connection of the thicker plate shall be processed into a 1:3 slope if the thickness difference is more than 4mm.

c) The spacing between circumferential welds on the straight pipe shall not be less than 0.5 m. The specialstructures like the branch pipe shall not be less than the high values as follows:

   1) 10 times the pipe wall thickness;

   2) 0.3 m;

   3) $3.5\sqrt{rt}$, r refers to the pipe radius and t refers to the pipe wall thickness.

d) The turning angle between the adjacent pipe sections of the bend section should be less than 10°.

e) With regard to the reducing conical tube at the position with the change in diameter, the cone-apex angle should not be greater than 7°.

8.5.2 Exposed penstock

8.5.2.1 The layout principles for the exposed penstock include:

a) The route of the exposed penstock shall be kept away from the location where the landslide or collapse may occur. If the influence of torrential flooding and falling rock is unavoidable for a few sections of the pipe, it may be solved by the exposed penstock in the tunnel, the underground penstock or the buried penstock with concrete wrapping.

b) The emergency drainage and anti-scour facilities shall be considered for preventing the penstock accidents from imperilling the safety of the equipment and personnel in the hydropower station.

c) The bottom of the exposed penstock shall be at least 0.6m off the ground surface.

d) The exposed penstock should be made into sections. The anchor block should be arranged at the bend, among the blocks the penstock is supported with the buttress. The expansion joint should be arranged between two anchor blocks, and the expansion joint should be on the downstream side of the anchor block.

e) If the straight pipe section is too long (about more than 150 m), the anchor blocks may be arranged alongthe straight pipe section. If the longitudinal gradient of the penstock is relatively gentle, the anchor blocksmay not be necessary, but the expansion joint should be arranged in the middle of this section. The flexiblecushion ring should be arranged at the position where the penstock passes through the upstream wall ofthe main powerhouse.

f) The spacing between supports shall be determined through stress analysis of the penstock and with consideration given to the installation conditions, support types and foundation conditions. The supports should be laid out at equal intervals between two adjacent anchor blocks. The spacing should be shortened for the span with the expansion joint. The corresponding structural measures shall be taken if the foundation may produce differential settlement.

g) The type of buttress may be determined according to the pipe diameter D:

Saddle buttress if D ≤ 1 m and the penstock is not equipped with supporting ring;Saddle buttress if D ≤ 2 m and the penstock is equipped with supporting ring;Sliding buttress, if D = 1 m to 3 m and the penstock is equipped with supporting ring;

Rolling buttress, if D > 2 m;Swinging buttress, if D > 2 m.

h) The spacing of both the anchor blocks and the buttresses should be shortened in the earthquake region.

i) The drainage ditches shall be laid out on both sides of the penstock, and the transverse drainage ditches shall be arranged on the ground beneath the penstock. The access road shall be built along the pipeline.

8.5.2.2 The requirements for the structural calculation of the exposed penstock include:

a) The structural calculation of the exposed penstock includes the calculation of the pipe wall stress and the calculation of the compressive resistance stability, as shown in Table 24.

Table 24 - Load combination for structural calculation of the exposed penstock

Load combination / Load	Basic combination			Special combination			
	Normal operating condition I	Normal operating condition II	Empty working condition	Special operating condition	Water pressure test	Construction condition	Earthquake condition
Hydrostatic pressure at normal reservoir level		√					
Maximum pressure under normal working conditions	√						
Maximum pressure under maximum working conditions				√			
Internal water pressure for water pressure test					√		
Dead weight of the penstock structure	√	√		√	√	√	√
Full water weight in the penstock	√	√		√			√
Partial water weight in the pipe when the penstock is filled or drained						√	
Force caused by temperature change	√	√			√		√
Water pressure acting on the position with the change in the pipeline diameter, turns and on the plug, gate valve and expansion coupling	√	√		√			√
Force caused by the differential settlement of the anchor block and buttress	√	√					√
Wind load		√			√		
Snow load		√			√		
Construction load					√		
Earthquake load							√
Air pressure difference caused by the ventilation equipment when the pipeline is empty			√				

b) When the inner pressure is borne by the penstock with supporting ring, its basic calculation positions include the mid-span, the edge of the stress area on the pipe wall near the supporting ring, the stiffening ring and its bypass pipe wall as well as the supporting ring and its bypass pipe wall.

c) The supporting pattern of the supporting ring shall be selected in combination with the technical and economic conditions of the entire pipeline project, and may be lateral supporting or lower supporting.

d) The foundation of the anchor support and buttress of the exposed penstock shall be solid and stable, and

should be arranged on the rock foundation.

- The maximum value for the foundation stress shall not be more than the allowable bearing capacity of the foundation.
- The size of the buttress body shall be helpful to distribute the foundation stress uniformly.
- If the anchor support and buttress are arranged on the soil foundation or semi-rock foundation, the influence of differential settlement of the foundation on the inner pressure of the penstock shall be studied, and additionally, the requirements for bearing capacity and stability shall be met.

8.5.3 Underground penstock

8.5.3.1 The underground penstock shall be laid out in line with the following principles:

a) The route of the underground penstock should be selected in the region with excellent topographical and geological conditions, and shall be kept away from the section with very high rock pressure, groundwater pressure and water inflow. The underground penstock should be buried deeply buried; the requirement for overburden rock thickness may be determined through calculation in accordance with the formula(28).

b) The water should be supplied with a single pipe for multiple units. If the pipeline is relatively short, the water intake volume is relatively large, there are many units, the time interval is relatively long or the engineering geological conditions are not suitable for excavating the cavern with large section, two or more pipelines may be adopted through technical and economic comparison; the spacing between two adjacent pipelines shall be determined with consideration given to the influence of the excavation blasting, and the rock strength shall also be verified.

c) The shaft type (horizontal tunnel, inclined shaft and vertical shaft) and the longitudinal gradient shall be selected according to the layout requirement, engineering geological condition and construction condition.

d) The drainage measures should be taken in the region with relatively high groundwater pressure. The drainage measures may include the drainage tunnel, drainage hole and drain pipe system, and shall be combined with the grouting curtain. The drainage measures shall be reliable, and should be maintainable. The long-term observation well or manometer shall be laid out to monitor the changes in groundwater level.

8.5.3.2 The requirements for structural calculation of the underground penstock include:

a) In the structural analysis of the underground penstock, the internal water pressure shall be jointly borne by the penstock, the concrete lining and rock, and the fissures existing between and among them shall be considered.

b) The concrete lining shall bear the rock pressure and transfer the elastic resistance of the surrounding rock. The penstock shall bear all the external water pressure and negative pressure.

c) The structural analysis of the underground penstock may be determined according to the Table 25.

Table 25 - Load combination for structural calculation of the underground penstock

Load combination / Load	Basic combination		Special combination	
	Normal operating condition	**Empty working condition**	**Special operating condition**	**Construction condition**
Maximum pressure under normal working condition	√			
Maximum pressure under special working condition			√	
Groundwater pressure		√		
Air pressure difference caused by ventilation equipment when the pipeline is empty		√		
Construction load: grouting pressure or non-hardened concrete pressure				√

d) The underground penstock shall take full advantage of the bearing capacity of the surrounding rock. The engineering geological conditions shall be sufficiently studied to determine the bearing capacity of the penstock.

e) For the lining of one section of the steel pipe near the upstream side of the powerhouse, the coefficient of the unit elastic resistance of the surrounding rock shall be appropriately reduced for use.

f) The groundwater pressure borne by the underground penstock may be determined according to the exploration data and with consideration given to the reservoir water filling and diversion system seepage.

g) The connector of the steel pipe connected to the reinforced concrete lining shall be properly treated. In the calculation, the possibility of groundwater pressure increase due to the leakage through the concrete cracks shall be taken into account.

8.5.4 Penstock embedded in the dam

8.5.4.1 The penstock embedded in the dam shall comply with the following principles:

a) The plane position of the penstock should be in the centre of the dam section, and its diameter should not be more than 1/3 of the dam section width. When the penstock is laid out, its influences on dam body stability and stress as well as the disturbance to construction shall be considered.

b) The vent hole shall be laid out to prevent the overflow through the pipe orifice influencing the normal operation of the electrical equipment in back of the dam.

c) The filling valve or bypass pipe shall be arranged at the inlet of the penstock for water filling; the surface area of the filling valve and the bypass pipe should be less than 1/5 of the surface area of the vent hole.

8.5.4.2 The structure of the penstock embedded in the dam shall be analysed in line with the following principles:

a) If the minimum thickness of the surrounding concrete is more than the diameter of the penstock, the penstock in the dam shall be deemed to be the multi-layered pipe composed of the penstock, the

reinforcement and the concrete to jointly bear the internal water pressure, and the influence of the gap between the penstock and the concrete as well as the cracks of the concrete shall be considered.

b) If the minimum thickness of the surrounding concrete is between the radius and the diameter of the penstock, it shall be demonstrated whether the load is jointly borne.

c) If the minimum thickness of the surrounding concrete is less than the radius of the penstock, the load should be borne by the penstock alone.

d) The penstock equipped with an elastic cushion layer may be designed as per the exposed penstock.

e) All the outer pressure shall be considered to be borne by the penstock. The seepage water pressure of the dam body may be assumed to vary linearly along the axis of the penstock, and the minimum outer pressure should not be less than 0.2 MPa.

8.5.5 Steel bifurcated pipe

8.5.5.1 The bifurcated pipe shall be designed in line with the following principles:

a) The structure shall be reasonable, and the stress concentration and deformation generated shall not be too great.

b) The water flow shall be smooth, the head loss shall be low, and the vortex and vibration shall be reduced. After bifurcating, the flow velocity should increase gradually.

c) It shall be convenient for fabrication, transportation and installation.

8.5.5.2 The bifurcated pipe type shall be selected through technical and economic comparison. The factors to be considered include the cost for fabrication and civil engineering work, the head loss, internal water pressure, dimension and stress condition of the bifurcated pipe, the layout type and the construction experience.

8.5.5.3 The centrelines of the main pipe and branch pipe of the bifurcated pipe should be laid on the same plane.

8.5.5.4 The typical layout of the bifurcated pipe includes asymmetrically branch-shaped, symmetrically Y-shaped or three-branch-shaped.

8.5.6 Hydraulic calculation

8.5.6.1 The hydraulic calculation of the penstock includes the calculation of the head loss and water hammer.

8.5.6.2 The calculation results for the head loss shall include: the maximum pressure line under normal working condition, maximum pressure line under special working condition and minimum pressure line.

8.5.6.3 The calculation of the water hammer is a part of the calculation of the regulation guarantee, and shall be performed in coordination with the calculation for the rotation speed changes of the unit. The calculation conditions shall be determined according to the operating situation of the hydropower station and the electric power system.

8.5.6.4 The adopted value of the pressure rise at the tail end of the penstock shall not be less than 10% of the hydrostatic pressure in the penstock at the normal reservoir level.

8.5.6.5 he preliminary calculation of the water hammer pressure may be performed under the following working conditions:

a) Calculation of maximum pressure under normal working condition:

- For the water hammer from the penstock, it corresponds to the normal level of the reservoir, and occurs when all the loads of all the units to which the water is supplied by this penstock are suddenly abandoned.
- For maximum surge of the surge chamber or forebay, it corresponds to the normal reservoir level of the reservoir, and occurs when all the loads of all the units to which the water is supplied by this surge chamber or forebay are suddenly abandoned.
- If the water hammer from the penstock may be overlapped with the surge of the surge chamber or forebay, the effect after they encounter each other shall be considered. If it can be seen from the study of the operational situation of the hydropower station that all the loads cannot be abandoned at the same time, the calculation may be performed as per the abandoned portion of the load.

b) Calculation of maximum pressure under the special working condition: the situation is idem, but the reservoir level refers to the maximum water level for power generation.

c) Calculation of minimum pressure: The water hammer from the penstock corresponds to the dead water level of the reservoir, and occurs when all but one unit to which the water is supplied by this penstock are running at full load, and the unit without load goes from idling to running at full load. If the system has a special operation requirement, the load increase amplitude may be determined according to the specific situation.

8.6 Desilting basin

8.6.1 General provisions

8.6.1.1 The setup of the desilting basin shall be designed for operation, and shall be consistent with the operation of the project structures, and be determined after technical and economic comparison.

8.6.1.2 The suspended sediment content, sediment particle size distribution and hardness data measured in the river where the project is located shall be collected.

8.6.1.3 Wear resistance of the turbine overflow components, anti-wear measures, overhaul interval of the turbine and working head of the turbine shall be collected.

8.6.2 Layout principle of the desilting basin

8.6.2.1 The location of the desilting basin shall be adjacent to the inlet of the first intake structures. When the topographic conditions or the flushing head cannot meet the requirements, the desilting basin can be moved down to the appropriate location along the diversion channel. The desilting basin shall be arranged with reasonable use of the topography and geological conditions to avoid the bad sections. Otherwise, corresponding engineering measures shall be taken.

8.6.2.2 Hydraulic flushing desilting basin is generally adopted in the hydropower stations. The hydraulic flushing desilting basin shall have sufficient water head and flow. If the terrain is wide, the desilting basin shall be the regular flushing desilting basin; If the terrain is narrow, the desilting basin shall be the continuous flushing desilting basin.

8.6.2.3 The axis of the desilting basin shall coincide with the axis of the diversion channel before the inlet of the desilting basin. When there is an angle, measures shall be taken to ensure the uniform distribution of the flow speed and flow direction in the working section of the desilting basin.

8.6.2.4 The main structures provided in the upstream connection section of the desilting basin shall guide the water flows in an evenly diffusing mode to the working section of the desilting basin. The requirements are as follows:

a) Diffusion section plane layout shall use the symmetric diffusion pattern, and the unilateral diffusion angle shall not be greater than 12°. The sum of the diffusive angles on both sides shall not be greater than 24°s with the asymmetric diffusion pattern. There shall be no falling-sill at the connection between the bottom plate of the section and the bottom of the working section pool.

b) Water distribution pier or other rectifying facilities shall be installed within the connection section, and its location, dimension and direction shall be determined by hydraulic model testing.

c) Regular flushing desilting basin shall be provided with the pool chamber inlet gate. Where there is a source of sewage, the trash rack and the decontamination facility shall be installed at the intake gate. The sill of the intake gate shall be level with or slightly higher than the upstream bottom plate. The size of the intake gate shall meet the layout and operational requirements of the gate, hoist, trash rack and decontamination facilities.

d) Row spacing, grid spacing or layout of the water distribution piers of the rectifier grid behind the intake gate shall be determined according to the hydraulic model test.

8.6.2.5 The working section of the desilting basin shall not only meet the sedimentation requirements, but also meet the requirements for silting and sand removal. The sand discharge channel outlet shall not be lifted up by the perennial flooding of the river course (the recurrence interval of 2 years) during the flood season.

8.6.2.6 The requirements for the working section of the regular flushing desilting basin are as follows

a) Sand sluice shall be set at the end of the working section of the regular flushing desilting basin. The sluice gate and the lifting and closing equipment of the sand sluice shall meet the requirements of the partial opening condition of the sluice gate.

b) The downstream sand discharge channel of the sand sluice shall adopt the form of the non-pressure sand discharge, and its longitudinal slope shall not be slower than the longitudinal slope of the working section of the desilting basin. Sand discharge channel outlet shall have anti-scouring and anti-silting measures to ensure the smooth sand discharge.

8.6.2.7 Requirements for the working section of the continuous flushing desilting basin are as follows:

a) The flushing system continuous flushing desilting basin shall consist of several branch corridors and a main corridor.

b) The bottom of the working section of the continuous flushing desilting basin can be made into a number of inverted trapezoidal troughs along the width of the tank, and the slope angle of the trough wall (angle with the horizontal direction) shall be greater than the underwater repose angle of the sediment. The bottom plate of the trough shall be arranged with a sand hole and connected with the branch corridor of the sand-flushing.

c) Branch corridors of the flushing system of the continuous flushing desilting basin shall be arranged under the sand inlet hole at the bottom of the basin in the direction of water flow. Each branch corridor shall flow into a main corridor. More than one flushing system shall be installed in the working section of the desilting basin, and the branch corridor length of the front flushing system shall be shorter than that of the rear flushing system.

d) Main and branch corridors shall have good hydraulic conditions and anti-wear measures shall be implemented. Main corridor sand flushing shall have anti-scouring and anti-silting measures, and ensure smooth sand discharge.

e) The sluice gate and the opening and closing equipment of the sand sluice shall meet the requirements of the partial opening conditions of the sluice gate.

f) Single-chamber continuous flushing desilting basin shall be equipped with the emergency sand sluice at the end of the working section of the desilting basin.

8.6.2.8 The side overflow weir shall be installed in the working section of the desilting basin, the diversion channel or the appropriate part of the watercourse, and the height of the top of the weir shall be slightly higher than the operating water level of the desilting basin. The overflow capacity shall be determined according to factors such as the losing load of the hydropower units and the possible excessive flow of the intake sluice.

8.6.2.9 The downstream connection section of the desilting basin of the hydropower station shall adopt the gradual shrinkage type. When the downstream is a pressurized water diversion channel, the water depth of this section shall meet the minimum submerged depth requirements of the pressurized water inlet and there shall be no vertical vortex and aeration.

8.6.3 Determination of the main dimensions of the desilting basin

8.6.3.1 The size of the desilting basin mainly includes the working depth, working width, working length and the longitudinal bottom slope of the working section.

8.6.3.2 The calculation requirements for the working depth of the regular flushing desilting basin are as follows:

a) The water depth of the working section inlet of the regular flushing desilting basin shall meet the formula (28).

$$H \leq \Delta Z + \frac{q}{v_c} - (iL_w + i_0 L_0) \quad (28)$$

where

H is the water depth of the working section inlet, in m;

ΔZ is the water level difference between the sand flushing operating water level of the desilting basin and the natural river at the outlet of the sand discharge channel, in m;

q is the flow per unit width in the sand discharge channel, in $m^3/(s \cdot m)$;

v_c is the flushing flow velocity in the sand discharge channel, in m/s;

i is the bottom slope of the working section of the desilting basin;

L_w is the length of the working section of the desilting basin, in m;

i_0 is the bottom slope of the sand discharge channel;

L_0 is the length of the sand discharge channel, in m.

b) The working depth of the working section inlet of the regular flushing desilting basin shall be calculated according to the formula (29).

$$H_c = H - \Delta H_k \quad (29)$$

where

H_c is the working depth of the working section of the desilting basin, in m;

ΔH_k is the allowable thickness of the sedimentation during operation, in m. In the initial scheme,(0.25 to 0.30) H can be chosen.

8.6.3.3 The working depth of the working section of the continuous flushing desilting basin shall meet the requirements of the formula (30).

$$H_c = \Delta Z_i - (1 + \sum \xi)\frac{v_c^2}{2g} - v_c^2 \int_0^L \frac{dL}{c^2 R} \quad (30)$$

where

$\triangle Z_i$ is the height difference between the operating water level of the desilting basin and the top of the outlet of the corridor, in m;

$\sum\zeta$ is the sum of the loss coefficients of the partial head;

L is the total length of the branch corridors and the main corridor, in m;

c is the chezy coefficient;

R is the hydraulic radius, in m.

8.6.3.4 The working width can be calculated according to the formula (31).

$$B = \frac{Q}{H_W v} \quad (31)$$

where

B is the working width, in m;

Q is the work flow, in m^3/s;

v is the average flow rate in the basin. When the initial scheme is adopted, it can be selected within the following range: when the minimum sedimentation particle size is 0.05mm to 0.10mm, the value can be selected from 0.05m/s to 0.15m/s; When the minimum sedimentation particle size is 0.25mm, the value can be 0.25m/s to 0.55m/s; when the minimum sedimentation particle size is 0.35mm, the value can be 0.40m/s to 0.8m/s;

H_w is the average working depth, in m.

8.6.3.5 The working depth of the working section of the hydraulic flushing desilting basin can be selected from 3 m to 8 m. The ratio of the width to the depth of the single-chamber working section shall not be greaterthan 4.5.

8.6.3.6 The width of the compartment in the working section of the regular flushing desilting basin shall satisfy the formula (32).

$$b_s = \frac{Q_s'}{q_s} \quad \text{.....(32)}$$

where

b_s is the width of the compartment in the working section of regular flushing desilting basin, in m;

Q_s' is the sand flushing flow velocity in the basin, in m^3/s;

q_s is the sand flushing flow velocity per unit width in the basin, in $m^3/(s \cdot m)$.

8.6.3.7 The calculation length of the desilting basin shall be determined according to the sedimentation speed and sedimentation rate of the sedimentation particle size. The length of the design working section shall be 1.2 times the calculated length. If necessary, the sedimentation rate of the suspended sediment grouping and the sediment concentration of the outflow basin grouping shall be verified by model tests.

8.6.3.8 The working section of the regular flushing desilting basin shall have a certain longitudinal bottom slope and shall satisfy the formula (33).

$$i \geq \frac{v_{ic}^2}{c^2 R} \quad \text{.....(33)}$$

where

v_{ic} is the sand flushing flow velocity, in m/s.

9 Powerhouse

9.1 General provisions

9.1.1 In accordance with its structure and stress characteristics, the powerhouse includes the following types:

a) Powerhouse at the dam toe:

- The powerhouse is located at the dam toe;
- The powerhouse is separated from the dam with the expansion-settlement joints,
- The dam totally bears the upstream water pressure, the powerhouse does not bear the upstream water pressure,
- The water for power generation is led into the turbine in the powerhouse through the penstock in the dam body.

b) Diversion powerhouse:

- With regard to the diversion powerhouse, its head race is relatively long;
- It may be classified into the pressure diversion powerhouse and non-pressure diversion powerhouse, depending on whether the water flow in the head race is or is not under pressure.

c) Water retaining powerhouse:

- With regard to the water retaining powerhouse, it is located in the river bed;
- The powerhouse retains the water and is one of the water retaining structures.

9.1.2 The powerhouse of the hydropower station is a complex composed of the hydraulic structure, the mechanical equipment and the electrical equipment to convert the hydraulic energy into electrical energy and output the electric energy, and is the place for the operating personnel to carry out the production activity. Generally, it is composed of two parts, namely the main powerhouse of the hydropower station and the auxiliary powerhouse of the hydropower station, and consists of five major systems, i.e. the water flow system, current system, electrical control equipment system, mechanical control equipment system and the auxiliary equipment system.

9.2 Layout of the plant area

9.2.1 The layout of the powerhouse and the plant area of the hydropower station shall be designed according to the topographical, geological and environment conditions, and in combination with the general engineering layout of the entire project, and shall comply with the following principles:

a) The main powerhouse, auxiliary powerhouse, main transformer site, switchyard, high/low voltage outgoing line, access, water diversion and tailwater structures shall be properly laid out so that the hydropower station can operate safely, and be conveniently managed and maintained, and at the same time shall conform to the landscape, ecological and environmental requirements.

b) The layout and operation of the powerhouse as well as the flood discharge structure, sediment discharge structure, navigation structure and fishpass shall be properly coordinated to avoid disturbance and ensure that the hydropower station operates safely and properly.

c) The safety measures for flood control, drainage and fire control as well as the requirements for overhaul in the powerhouse area shall be comprehensively considered.

d) The requisitioning of farmland shall be minimized; the natural vegetation, environment and cultural relics shall be protected.

e) The overall planning for the building environment in the plant area shall be properly performed, and the aesthetic treatment of the main structures shall be properly carried out.

f) The operation and management of the auxiliary facilities for production shall be arranged uniformly.

g) The construction procedure, construction diversion and the construction period requirement for putting the first batch of units into operation for power generation shall be comprehensively considered, and the layout of the structures shall be optimized.

9.2.2 The main powerhouse shall be built on stable rock foundation or the solid soil foundation.

- The powerhouse should be kept away from the gully mouth and the collapse mass. And corresponding preventive measures shall be fully studied and implemented for the possible torrential flood deposits, mud debris flow or collapse mass occurring under the same flood standards as for the powerhouse.
- When the powerhouse is located at the toe of the high steep slope, safety measures shall be taken and interception and drainage facilities shall be arranged.
- Reliable foundation treatment solutions should be taken when the powerhouse is on the soft foundation.

- If the powerhouse is laid out on the river bank, it shall be laid out close to the bank in the river direction, but shall not occupy the flood discharge section of the river channel to prevent the flood directly impacting the powerhouse. And temporary measures shall be taken to prevent the powerhouse from being submersed when the flood level exceeds the design standard flood.

9.2.3 When the penstock is laid on the surface, the powerhouse should be laid out in the direction away from the direct impact of the water flow in an emergency; if impossible, other protective measures shall be taken.

9.2.4 The position of the auxiliary powerhouse shall be coordinated with the site for the main transformer, the position of the main powerhouse and the environmental requirement, and determined through comprehensive comparison. Meanwhile, the effective space shall be reasonably utilized for convenient external traffic in combination with the requirement for operational and management convenience.

9.2.5 The positions of the main transformer and the switchyard shall be determined in combination with the requirements for installation, overhaul, transportation, firefighting access, incoming line and outgoing line and fire and explosion protection and in line with the following principles:

a) The position of the main transformer should be close to the main powerhouse, and its elevation should be same as that of the assembly bay. The fire and explosion protection as well as the ventilation and heat dissipation at the place for the main transformer shall comply with the provisions of the applicable codes.

b) The switchyard should be close to the main transformer, and shall be laid in the section with a stable foundation and side slope or in other suitable places; its incoming line and outgoing line shall be prevented from striding over the hydraulic jump or the jet flow region of the structure. The position of the switchyard should be kept away from the gully; if impossible, the preventive measures shall be taken for the torrential flood, debris flow and collapse mass.

c) The outgoing line site should be near the switchyard. With regard to the indoor switchyard, the outgoing line site may be laid out on the top of the powerhouse.

9.2.6 With regard to the expanded and reconstructed powerhouse of the hydropower station, the new and old structures and facilities shall be coordinated, and the safety of the old structures shall be ensured; during the construction, the impact on the power generation shall be minimized.

9.2.7 With regard to the water intake part of the powerhouse of the hydropower station in the river channel, the influences of sediment, debris and floating ice on power generation shall be properly handled in combination with the layout of the project.

9.2.8 With regard to the powerhouse at the dam toe, the permanent deformation joints shall usually be arranged between the powerhouse and the dam. To satisfy the overall stability requirement of the powerhouse and the dam or other requirements, the powerhouse and the dam may be connected into a whole upon demonstration.

9.2.9 When the powerhouse is adjacent to the release structure, the guide wall arranged between them shall be of sufficient length.

9.2.10 The tail race shall be laid out according to the specific situation of the hydropower station and in line with the following principles:

a) It shall be laid out with consideration given to the influences of the unit operation conditions, the geological and topographical conditions, flow direction of river channel, flood discharge, sediment discharge and other structures; and the protective measures shall be taken for the positions prone to undermining or clogging.

b) The influences of river bed variation due to sluicing of the project, the backwater of the downstream cascade project and sand excavation in the river bed shall be taken into account.

c) The tailwater level of the powerhouse shall not be raised by discarding the residue.

9.2.11 The flood control and drainage system in the powerhouse area shall be designed according to the following requirements:

a) The sites for the main/auxiliary powerhouses and the main transformer as well as the switchyard shall not be submerged at the protection water level.

b) The water drainage, pipe ditch layout, drainage method and drainage facilities in the powerhouse area shall be determined through comprehensive consideration according to the importance of powerhouse of the hydropower station, the local climatic characteristics, design rainstorm intensity, duration of rainfall, design recurrence interval of rainstorms, properties of the water catchment, topographical features as well as other possible catchments. The design rainfall recurrence interval may be 3 to 5 years and the design rainfall duration may be 5 min. to 15 min.

c) Reliable measures shall be taken to be flooded.

d) Corresponding protective measures shall be taken for the adverse effects caused by flood discharge, rainfall or atomization.

e) Necessary blocking, diversion and drainage measures shall be taken for the cavern, pipe ditch, passage and reserved notch which may cause water logging of the powerhouse.

f) The drainage of surface water and groundwater from the side slope of the various structures shall be designed.

9.2.12 The traffic in the powerhouse area shall be laid out in line with the following principles:

a) The traffic shall be planned and arranged comprehensively from both the short-term and long-term perspectives, and shall meet the requirements for transportation and handling of the heavy parts and large parts of the electromechanical equipment.

b) The main traffic shall be kept unobstructed under the design flood standard condition; pedestrian traffic shall not be interrupted under the verified flood standard condition; appropriate protective measures should be taken for the section within the scope of the water discharge and atomization.

c) The straight section shall be arranged in front of the incoming road.

d) The design longitudinal gradient of the incoming road should be less than 8%, the maximum longitudinal gradient should be less than 12% in the section that is difficult for layout due to the limitation of the topographic condition, the width of the main roads within the powerhouse area should not be less than 3.5m, and the turnaround may be arranged in front of the powerhouse.

e) With regard to the powerhouse with high tailwater level, the vertical transportation mode may be used for the main traffic in and out of the powerhouse.

f) The incoming road should be led into the powerhouse from the downstream side. When the incoming road shall lead into the powerhouse from the end of the powerhouse parallel to the direction of its axis due to the limitations of the topographic, geologic and junction layout conditions, the warning signs or interceptor shall be arranged.

9.2.13 In the plant area, the fire control facilities shall be arranged; the fire resistance rating of the powerhouse shall comply with the provision on fire control.

9.3 Internal layout of the powerhouse

9.3.1 For the internal layout of the powerhouse, the dimensions and space of the various parts shall be reasonably determined and distributed according to the scale of the hydropower station, powerhouse type, environmental features, civil engineering design, layout of the electromechanical equipment, operation maintenance, installation and overhaul.

9.3.2 The plane dimensions of the powerhouse for the horizontal unit mainly depend on the plane dimension (diameter) of the spiral case and the length of the entire unit bay.

- The plane dimensions of the powerhouse for the vertical unit mainly depend on the dimension (width) of the generator base and the length of the unit;
- The powerhouse for the bulb tubular unit depends on the runner size and the thickness of the gate pier as well as the layout of the inlet and outlet gates and the hoist, and the layout requirements for the auxiliary equipment such as the main valve, the governor and the local panel as well as the pedestrian path in the powerhouse.
- The height of the powerhouse mainly depends on the dispatching and transportation conditions for the equipment and the installation elevation of the turbine.

9.3.3 The spacing between units in main powerhouse shall meet the following requirements:

a) If horizontal unit is used, the generator rotor shall be able to be drawn out and inserted during installation and overhaul if necessary, and the net spacing between units shall not be less than 1.5m to 2.0m.

b) If the vertical unit is used, it shall be determined, through comprehensive consideration, on the plane according to the wind tunnel diameter of the generator, the sizes of the spiral case and the draft tube.

- The thickness of the separating piers between the adjacent concrete spiral cases and between the draft tubes should not be less than 1.0 m to 2.0 m (use the high value when the permanentjoint has been arranged).
- The thickness of the separating pier between the metal spiral cases should not be less than 1.0 m.
- The net spacing between the wind tunnel cover plates of the generator should not be less than 1.5 m to 2.0 m.
- With regard to the spacing between units in the powerhouse within the dam and the overflow type powerhouse, the necessary thickness of the concrete between the draft tubes shall be considered.

c) If the bulb tubular unit is used, it shall be determined according to the runner width, the number of units and the joint separating method. The additional length of the side unit bay shall be determined according to the boundary line of the bridge crane hook, which should usually be 3 m to 5 m.

9.3.4 The control dimension of the main machine room of the main powerhouse shall be determined according to the following principles:

a) The length and width of the main machine room shall be determined with comprehensive consideration given to the number of units, the flow passage components of the turbine, the dimensions of the generator and the air flue, the lifting mode of the crane, the position of inlet the valve and governor, the structural requirements of the powerhouse, and the operation maintenance and traffic in the powerhouse.

b) The flow passage components of the turbine and the supporting method for the unit shall be selected according to the data provided by the manufacturer and in combination with the hydraulic structure.

c) When the length of the unit bay is controlled by the dimension of the turbine spiral case, the length of the unit bay shall meet the spatial requirements for installation of the spiral case and the minimum spatial dimension should not be less than 0.8m for the metal spiral case; if the concrete is placed by filling water and applying pressure, the space for installation and removal of the bulkhead and the water filling and pressure applying devices should be considered; the wall thickness of the concrete spiral case should be determined according to the strength, rigidity and structural requirements.

d) When the length of the unit bay is controlled by the dimensions of the generator and its air flue, the spacing between units shall meet the equipment layout requirements, and the passage with the necessary width shall be reserved.

e) The length of the unit bay in the powerhouse at the dam toe should be coordinated with the dam body joints. For the diversion powerhouse through the tunnels, it shall still be adaptive to the thickness of the rock mass between the penstocks.

f) When the sediment discharging and draining holes have been arranged in the unit bay, the structural strength, composition and construction requirements of the holes shall be fulfilled at the same time.

g) The length and width of the main machine room shall meet the requirements for the effective working scope of the crane hook, the layout of the inlet valve and governor, the traffic in the powerhouse and the structural requirements.

h) The structural dimensions of the main powerhouse above water and under water should be concurrently coordinated and considered.

i) The length of the side unit bay shall be determined in combination with the position of the erection bay, the height elevation between the main machine room and the erection bay as well as the lifting scope of the crane.

9.3.5 The dimensions and layout of the assembly bay in the main powerhouse may be determined in line with the following principles:

a) The surface area of the assembly bay shall be comprehensively determined according to the powerhouse type, unit structure, installation progress and expanded overhaul of one unit.

b) When the data in unavailable, the length of the assembly bay may be 1.25 to 1.5 times the length of the unit bay; with regard to the hydropower station with multiple units, the surface area of the assembly bay may be increased as required or an auxiliary assembly bay may be arranged.

c) The ground elevation of the assembly bay should be same as the ground elevation of the generator floor; if the downstream flood tailwater level is higher than the ground elevation of the generator floor, the elevation of the assembly bay may be increased.

d) The layout of the assembly bay shall satisfy the requirements for the transportation, installation and overhaul of the equipment or the access of vehicles for handling according to the number of installed units. The assembly bay may be laid out on one end, both ends or in the middle section of the main powerhouse.

e) The layout of the assembly bay shall be adaptive to the transportation methods for the main equipment.

9.3.6 The layout and rail top elevation of the crane in the main powerhouse shall be determined according to the following requirements:

a) The requirement for lifting the main parts of the unit shall be met. When the inlet valve is arranged in the powerhouse, the centreline should be laid out within the working scope of the auxiliary hook of the crane.

b) The rail top elevation of the crane shall be determined according to the crane specifications as well as the lifting requirements during installation and the overhaul of the units or the main transformer (in the case where the main transformer is provided inside the powerhouse), and shall meet the requirements for loading/unloading the goods on the transportation vehicle in the powerhouse.

c) The net distance between the crane top and the powerhouse ceiling (or lower chord of the roof truss and the lamp bottom) shall not be less than 0.3 m.

d) The necessary space for removing and installing the reducer cover, the coiling block and the motor shall be reserved at the appropriate positions of the powerhouse roof.

e) In addition to the traveling demands of the cart, the clearance for the installation and overhaul of the travelling mechanism of the cart as well as the turn-out space for personnel shall be reserved at the appropriate positions in the interval between the end edge of the crane and the upstream/downstream walls.

f) The width of the crane beam top face (including the walkway of the crane beam) shall meet the passing requirement for the operating personnel, and the ladder for the operator (in the case where it is driver cab-equipped) and the overhaul personnel to get on or off the crane shall be provided.

g) The safe distance from the lifted component to the installed equipment, structure and ground shall not be less than 0.3 m.

9.3.7 The traffic in the powerhouse shall comply with the following provisions:

a) The traffic in the powerhouse (including the stairway, spiral staircase, ladder stand, lifting holes, horizontal passage and gallery) shall be convenient for management and beneficial for overhaul and quick troubleshooting.

b) The dimensions of the main passage as well as the width of the stairway, gradient and the arrangement of the emergency exit shall meet the requirements of the electromechanical and fire control design codes.

c) The straight horizontal passage throughout the entire powerhouse should be arranged on the generator floor and the turbine floor.

d) One stairway should be arranged every 1 to 2 unit bays between the main floors including the generator floor, the busbar floor and the turbine floor; at least two stairways should be arranged in the entire plant.

e) The lifting holes for installation and overhaul should be arranged in the main powerhouse within the working scope of the crane hook and in the auxiliary powerhouse requiring lifting of the electromechanical equipment.

9.3.8 The layout and dimensions of the turbine pit shall meet the requirements for unit installation and maintenance; the strength and rigidity of the unit supporting structure as well as the spiral case and stand ring supporting structure shall be sufficient.

9.3.9 The elevations of the various floors in the main powerhouse shall meet the following requirements:

a) The requirements for the layout of the unit and the auxiliary equipment, and the installation, overhaul, operation, maintenance, structural dimension and building space shall be met.

b) The installation elevation of the turbine shall be determined through technical and economic demonstration according to the unit characteristics provided by the manufacturer, the turbine draft head

and the minimum downstream tailwater level during the operating period of the hydropower station, and in combination with the topographical and geological conditions of the powerhouse site.

c) The ground elevation of the turbine floor shall be determined in accordance with the section size of the spiral case inlet as well as the minimum thickness of the concrete structure on top of the spiral case.

d) The ground elevation of the generator floor shall meet the layout requirement for the generator floor, and the influences of the equipment layout on the turbine floor as well as the layout of busbar cables and the downstream water level.

e) If the space of the main powerhouse permits, the cable floor may also be arranged below the generator floor; its net clearance shall meet the requirements for the laying of the main outgoing lines and cables, operation maintenance and fire control of the generator.

f) The roof elevation shall be determined according to the roofing type and the structural dimension, and shall meet the requirements for installation and overhaul of the crane components, ceiling installation of the powerhouse, the layout of the lighting facilities and thermal insulation.

9.3.10 The layout of the tailrace platform shall meet the following requirements:

a) The width of the tailrace platform shall meet the requirements of the layout of the tail lock and hoist, gate lifting, traffic, downstream flood control facilities and fire control for the structural dimensions.

b) The length of the tailrace platform may be determined according to the requirements for the operation of the hoist and the overhaul of the gate.

c) With regard to the powerhouse with a relatively long draft tube, the main transformer, switchyard or auxiliary powerhouse may be laid out on the tailrace platform; if the length of the draft tube has to be increased for this purpose, it shall be demonstrated in the technical and economic aspects.

9.3.11 The layout of the central control room shall be determined in line with the following principles:

a) It shall be convenient for operation and maintenance management, and convenient for transiting by stages and saving cables. The influence of disturbances like vibration, noise and magnetic field should be avoided.

b) Its elevation should be equal to or slightly higher than the elevation of the generator floor. When the central control room is higher than the generator floor, the traffic between them shall be convenient.

c) When the central control room is arranged in the remote centralized control centre, the transition duty room may be arranged in the auxiliary powerhouse.

d) The auxiliary powerhouse for production accommodating high noise equipment such as the air compressor room or the ventilation equipment room should not be laid out around the central control room.

e) Effective measures for preventing unit vibration shall be implemented for the central control room built on the tailrace platform.

f) The position and orientation with good natural ventilation and lighting conditions shall be selected if possible.

g) At least two inlets/outlets shall be arranged.

h) Complete safety and fire control facilities shall be arranged.

9.3.12 The surface area of the auxiliary powerhouse as well as the layout of the rooms within the powerhouse

shall be determined through comprehensive consideration according to the requirements for layout, repair, test and management of the electromechanical equipment, and in combination with the specific conditions of the powerhouse.

9.4 Overall stability analysis for the powerhouse on ground

9.4.1 General provisions

9.4.1.1 The overall stability analysis for the powerhouse shall be performed according to the foundation condition, structural characteristics and construction conditions. The specific contents may include:

a) Calculation of the anti-sliding stability of the foundation surface. When the weak structural surface unfavourable to the overall stability of the powerhouse exists in the powerhouse foundation, the calculation of the deep anti-sliding stability of the powerhouse along the weak structure shall also be calculated. For a powerhouse located on the earth foundation, the cut-off wall floor anti-sliding stability shall be verified.

b) Calculation of the normal stress on the powerhouse foundation surface.

c) Verification of the anti-floating stability of the powerhouse (including the situation where the second phase concrete of the powerhouse has not been placed).

d) With regard to the powerhouse not on the rock foundation, the bearing capacity, deformation and settlement of the foundation shall be verified.

9.4.1.2 The overall stability and ground stress of the powerhouse should be calculated with the material mechanics method.

9.4.1.3 The calculations for the overall stability and ground stress of the powerhouse shall be respectively performed according to the load combinations with the middle unit bay, side unit bay and assembly bay section as a separate unit. When the lateral water pressure acts on the side unit bay and the assembly bay section, the overall stability and ground stress under the effect of two-way water pressure also shall be verified.

9.4.1.4 With regard to the powerhouse at the dam toe, the combined effect of the powerhouse and the dam shall be considered when the powerhouse and the dam are connected as a whole.

9.4.2 Loads and load combination

9.4.2.1 Loads acting on the hydropower buildings include: the dead-weight of the powerhouse and its permanent equipment, the backfill weight and water weight acting on the powerhouse, the hydrostatic pressure, uplift pressure, sediment pressure, wave pressure, ice pressure, earthquake load, dynamic load due to generator short circuiting, and other possible loads.

9.4.2.2 The structure weight of various parts of the powerhouse shall be determined through calculation according to their geometric dimensions and the unit weight of the material. The unit weight of the common materials should be selected as per the following values:

a) 25 kN/m^3 for the reinforced concrete;

b) The unit weight of the masonry should be 21 kN/m^3 to 25 kN/m^3;

c) The unit weight of the backfilled earth and rock should be 16 kN/m^3 to 18 kN/m^3.

d) The water weight shall be calculated as per the actual volume; the unit weight of the water may be

10 kN/m^3. With regard to the water weight of the overloaded river, the influence of the actual sedimentconcentration shall be taken into account.

9.4.2.3 With regard to the weight of the electromechanical equipment in the powerhouse, the weight of the stationary main equipment shall be calculated, and the auxiliary equipment and non-stationary equipment may not be considered.

9.4.2.4 The hydrostatic pressure acting on the powerhouse shall be determined through calculation according to the upstream and downstream water levels of the powerhouse under different operating conditions. With regard to the overloaded river, the influence of sediment concentration on the unit weight of the water shall be taken into account.

9.4.2.5 The uplift pressure acting on the powerhouse on a rock foundation shall be calculated according to the following principles:

a) It shall be calculated according to the distributed force on all sectional areas of the calculation section.

b) The uplift pressure distribution pattern of the river-side powerhouse floor may be determined respectively under the following three conditions:

   1) When the anti-seepage curtain and the drainage hole are arranged on the upstream side of the powerhouse, the uplift pressure pattern shall be adopted according to Figure 8(a) and the seepage pressure intensity coefficient α shall be 0.25.

   2) When the anti-seepage curtain and the drainage hole are not arranged on the upstream side of the powerhouse, the acting head of the uplift pressure is H_1 on the upstream side of the powerhouse floor and is H_2 on the downstream side, which are connected with a straight line, as shown in Figure 8(b).

   3) When the anti-seepage curtain and the drainage hole are arranged on the upstream side of the powerhouse and the drainage holes and pumping-drainage system are arranged on the downstream side, the uplift pressure pattern is as shown in Figure 8(c), where α_1 is 0.2 and α_2 is 0.5.

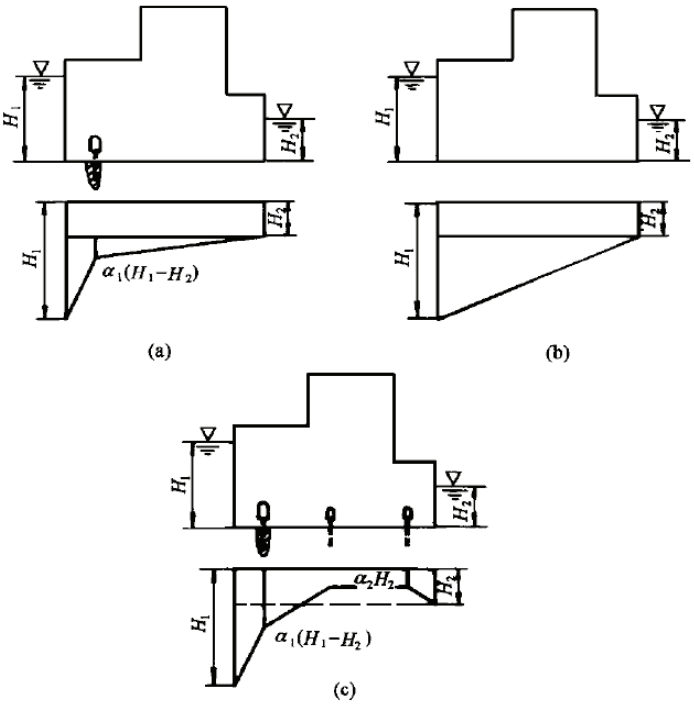

Figure 8 - Uplift pressure distribution pattern of the water retaining powerhouse

c) With regard to the powerhouse at the dam toe, when the powerhouse and the dam are connected as a whole or the permanent deformation joints are arranged between the powerhouse and the dam, and have been sealed with the waterstop, its uplift pressure distribution pattern shall be considered together with the dam body.

   1) With regard to the powerhouse at the dam toe of the solid gravity dam, when the anti-seepage curtain and the drainage holes are arranged in the upstream dam foundation, and there is no pumping and drainage facility in the downstream dam foundation, the uplift pressure pattern is as shown in Figure 9(a); ΔH is determined through calculation according to the positions of the curtain and the drainage holes as well as value a.

   2) With regard to the powerhouse at the dam toe of the wide-slot dam and the hollow dam, ΔH=0, as shown in Figure 9(b).

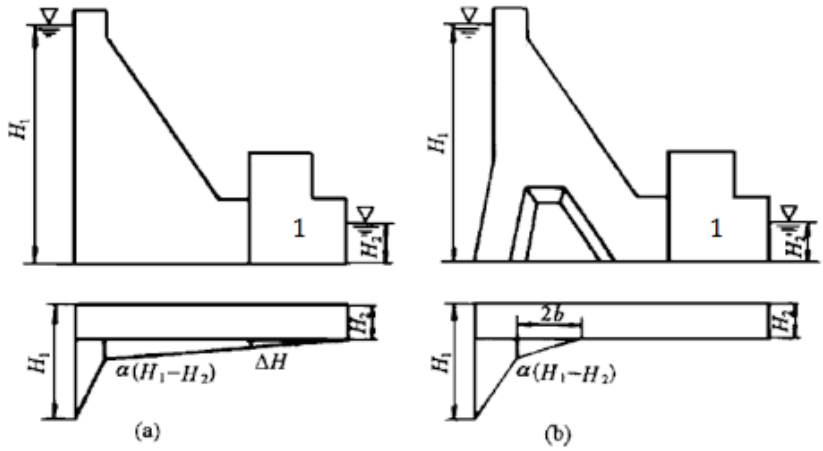

Key

1 powerhouse

b the dam body width at the wide joint

Figure 9 - Uplift pressure distribution pattern of powerhouse at dam toe

d) The upstream side uplift pressure acting on the building for a river-bank type powerhouse can be determined in accordance with the groundwater level and the drainage facilities.

e) When the duration of flood peak is relatively short and the downstream flood level is relatively high, the uplift pressure distribution pattern of the powerhouse may be reduced with consideration given to the time effect.

9.4.2.6 The uplift pressure distribution pattern of the powerhouse not built on rock foundation shall be determined through calculation or simulation testing according to the specific situation of the design for the underground contour of the structures in the powerhouse as well as the permeability characteristics of the foundation.

9.4.2.7 The load combinations may be classified into basic combination and special combination. The load combination for the overall stability analysis of the powerhouse may be adopted with reference to the provisions in Table 26. Other possible unfavourable combinations may also be considered when necessary.

Table 26 - Load combination

Load combination	Calculation condition	Upstream/downstream water level		Load category											Remarks
				Dead weight of structure	Permanent equipment	Water weight	Weight of backfilled earth and rock	Hydrostatic pressure	Uplift pressure	Wave pressure	Sediment pressure	Soil pressure	Ice pressure	Seismic load	
Basic combination	Normal operation	a1	Upstream normal reservoir level and downstream minimum water level	√	√	√	√	√	√	√	√	√	√		
		a2	Upstream design flood level and downstream corresponding water level	√	√	√	√	√	√	√	√	√			
		b	Downstream design flood level	√	√	√	√	√	√			√			
Special combination	Unit maintenance	a	Upstream normal reservoir level and downstream maintenance water level	√		√	√	√	√	√	√	√	√		
		b	Downstream maintenance water level	√		√	√	√	√			√			
	Unit not be installed	a	Upstream normal reservoir level or design flood level and downstream water level	√		√	√	√	√	√	√	√	√		(1) The second phase concrete for the spiral case has not been placed (2) The water weight shall be determined according to the actual situation.
		b	Downstream design flood level	√		√	√	√	√			√			
	Abnormal operation	a	Upstream verified flood level and downstream verified flood level	√	√	√	√	√	√	√	√	√			
		b	Downstream verified flood level	√	√	√	√	√	√			√			

	Earthquake condition	a	Upstream normal reservoir level and downstream minimum water level	√	√	√	√	√	√	√	√	√	√	√	It may be specified otherwise if the upstream and downstream water levels are subjected to another demonstration
		b	Downstream normal water level	√	√	√	√	√	√			√		√	

Notes 1 In the table, a applies to the water retaining powerhouse and b applies to the powerhouse at the dam toe and the river-side powerhouse;

Notes 2 If wave pressure and ice pressure do not exist at the same time, either of them may be selected for the calculation according to the actual situation;

Notes 3 The situation during construction shall be verified as necessary and may be used as the special combination;

Notes 4 It may be used as the special combination if the drainage failure situation is taken into account when the drainage holes are arranged on the powerhouse foundation;

Notes 5 The corresponding downstream water level, under Case a2 in Normal Operating, Case a in Unit not be Installed, and Case a in Abnormal Operation, refers to the water levels that are most unfavourable for the powerhouse when the design flood level or verified flood level occurs in the upstream, including the scenarios of the flood discharging or no flood discharging from the dam;

Notes 6 The upstream water level is determined by the layout of the waterstop for the at-dam-toe powerhouse, and by the underground table for the river-side powerhouse.

9.4.3 - Calculation of the overall stability and ground stress

9.4.3.1 The anti-sliding stability of the entire powerhouse can be calculated by formula (23) to formula (25), and all the forces acting on the powerhouse foundation. The minimum safety factors for the anti-sliding stability of the powerhouse are listed in Table 27.

Table 27 - Minimum safety factors for the anti-sliding stability of the Powerhouse

Foundation Type	Load Combination	Safety Factor	Applied Formula
Soft foundation	Basic combination	1.25	Formula (23),(24)
	Special combination I	1.10	
	Special combination II	1.05	
Rock foundation	Basic combination	1.10	Formula (23)
	Special combination I	1.05	
	Special combination II	1.00	
	Basic combination	3.00	Formula (25)
	Special combination I	2.50	
	Special combination II	2.30	
NOTE Special combination I is in case of turbine-generator maintenance, construction period, completion and abnormal operation. Special combination II is in case of earthquake.			

9.4.3.2 The normal stress on the powerhouse foundation can be calculated as per the formula (22). The average stress on the soil foundation should not be greater than the allowable bearing capacity; the maximum stress should not be less than 1.2 times the allowable bearing capacity of the foundation. The allowable non-uniform coefficients for the normal stresses acting on the foundation are listed in Table 17.

9.4.3.3 In the calculation of the normal stress on the foundation surface of the powerhouse on rock foundation with the method of the mechanics of the material, the following requirements shall be met:

a) The maximum normal stress borne by the powerhouse foundation surface shall not be more than the allowable bearing capacity of the foundation. Under earthquake conditions, the allowable bearing capacity of the foundation may be increased appropriately;

b) The minimum normal stress (counted in the uplift pressure) borne by the powerhouse foundation surface shall meet the following requirements:

   1) With regard to the water retaining powerhouse, the minimum normal stress shall be greater than zero except for earthquake conditions; under earthquake conditions, the allowable tensile stress shall not be more than 0.1MPa;

   2) With regard to the powerhouse at the dam toe and the river-side powerhouse, the minimum normal stress shall be greater than zero under normal operating conditions; partial tensile stress not more than 0.1Mpa to 0.2MPa is acceptable under the "unit maintenance", "unit has not been installed" and "abnormal operation" conditions. If the tensile stress is more than 0.2MPa under earthquake conditions, this shall be particularly demonstrated.

9.4.3.4 The anti-floating stability of the powerhouse shall be calculated as per the formula (34) with the most unfavourable scenario, where the turbine-generator maintenance, turbine-generator not to be installed, abnormal operation are as shown in Table 25:

$$K_f = \frac{\sum W}{U} \quad \text{.....(34)}$$

Where

K_f is the anti-floating stability safety factor, greater than 1.1 under any condition;

$\sum W$ is the weight (forces)of the unit bay or assembly bay, in kN;

U is the total uplift pressure acting on the unit bay or assembly bay, in kN

9.4.3.5 The seepage path length of the soil foundation should meet the requirement for foundation seepage stability. The seepage path length can be calculated as per the formula (20).

9.5 Structural design of the powerhouse

9.5.1 General provisions

9.5.1.1 The powerhouse structure of the hydropower station may be divided into upper structure and lower structure.

- The upper structure refers to the none retaining structure part above the ground (verified flood level), including the bent frame column, crane beam, ground floor beam and slab, roof, connection beam, ring beam and the tailwater frame;

- The lower structure refers to the retaining structure part under the ground (verified flood level), including the retaining wall, floor, turbine floor beam and slab, generator pier, spiral case, draft tube, water-collecting well, tailwater gate pier and tailrace platform.

9.5.1.2 The structural design of the powerhouse shall be respectively calculated and verified according to the following provisions in accordance with the requirements for the limit state of the bearing capacity and the normal serviceability limit state:

a) Bearing capacity: The bearing capacity shall be calculated for all the structural members of the powerhouse; the seismic bearing capacity shall be calculated for the structures requiring earthquake fortification.

b) Deformation: The deformation shall be verified for the structural members requiring deformation control, such as the crane beam and the powerhouse framework.

c) Crack control: The anti-crack or crack width shall be verified for the lower structure members bearing water pressure, such as the reinforced concrete spiral case, gate pier, breast wall and water-retaining wall; the crack width shall be verified for the upper structure members required to limit the crack width.

9.5.1.3 The general structural members of the powerhouse structure may only be subject to the calculation of the static force; however, the dynamic calculation shall be performed for the structural members directly bearing the vibration loads of the equipment such as the supporting structure of the generator. The general structure may be calculated with the structural mechanics method; in addition to the structural mechanics method, the complex structure should also be calculated and analysed with the finite element method.

9.5.1.4 The concrete on the powerhouse parts shall meet the strength requirements; besides the durability requirements including the anti-permeability, frost resistance, erosion control and anti-scour shall be respectively increased according to the environmental conditions, service conditions and local climatic conditions. The concrete strength grade may be adopted with reference to Table 28.

Table 28 - Strength grade of the concrete on various parts of the powerhouse structure

S/N	Structural part	Strength grade (28-day age)	Remarks
1	Large-volume foundation	≥C20	
2	Draft tube, spiral case, generator pier, fan housing, tailwater gate pier and underwater wall	≥C25	
3	Concrete structure in the water level changing area	≥C25	
4	Upper structural beam, plate, and pillar	≥C25	
5	Bridge deck and prefabricated reinforced concrete crane beam roof truss	≥C30	Not lower than C35 when HRB400 reinforcement is used.
6	Pre-stressed reinforced concrete member	≥C35	When the high-strength steel wire and heat tempering bars are used for pre-stressed reinforcement, the concrete strength grade should not be lower than C40.
NOTE 1 If the member employs HRB400 reinforcement and bears repeated action, the concrete strength grade should not be lower than C25; NOTE 2 The positions with serious freeze thawing conditions and that are required for anti-scour and abrasion resistance, this shall be determined through dedicated research, and the concrete strength grade shall not be lower than C25.			

9.5.2 Lower portion structure

9.5.2.1 When the foundation is hard and integral rock, it may be made into the separating floor or the floor may be omitted in principle. The floor thickness is usually 0.3 m to 0.5 m. If the floor is omitted, the rocksurface should be smoothed to reduce head loss and is required to be anti-scouring and wear resistant. Withregard to the powerhouse with poor geological conditions, the integral reinforced concrete floor will usuallybe used, and the thickness can usually reach 2 m to 3 m.

9.5.2.2 The draft tube structure is complex in shape, large in size and relatively integral; in the structural design, the draft tube structure will be divided into three parts according to the structural features of the various parts, i.e. the taper tube section, elbow tube section and diffuser section; the inner force shall be analysed with the corresponding method.

9.5.2.3 The design loads of the draft tube structure include: dead weight of the structure, weight of the structure and equipment above the draft tube roof, internal water pressure, external water pressure and uplift pressure.

9.5.2.4 The draft tube structure shall be calculated under the following four conditions:

a) Normal operation: The combination loads include the dead weight of the structure, the weight of the structure and equipment above the draft tube roof, the internal water pressure (normal tailwater level), external water pressure (normal tailwater level) and uplift pressure (normal tailwater level).

b) Maintenance period: The combination loads include the dead weight of the structure, the weight of the structure and equipment above the draft tube roof, the external water pressure (normal tailwater level) and uplift pressure (normal tailwater level).

c) Construction period: The combination loads include the dead weight of the structure, and the weight of the structure and equipment above the draft tube roof.

d) Check floor operation: The combination loads include the dead weight of the structure, the weight of the structure and equipment above the draft tube roof, the internal water pressure (check tailwater level), external water pressure (check tailwater level) and uplift pressure (check tailwater level).

9.5.2.5 The inner force of the draft tube structure shall be calculated according to the following principles:

a) The vertical water flow direction should be simplified into the plane problem, i.e. the zoning along the water flow direction to obtain several profiles, and calculating as per the plane frame.

b) With regard to the powerhouse with the high tailwater level, the strength of the roof, floor and buttress along the water flow direction shall be verified.

9.5.2.6 The spiral case in the powerhouse of the hydropower station refers to the flow passing part of the turbine, and mainly bears the tensile stress generated by the internal water pressure; the hydropower station with the medium or high head employs the metal spiral case; the spiral case of the hydropower station with the low head (head<30 m) is relatively small so that it should be made of reinforced concrete.

9.5.2.7 The design loads of the reinforced concrete spiral case structure include:

a) Dead weight of the structure;

b) Loads transferred from the generator pier and the fan housing;

c) Live load on the ground of the turbine floor;

d) Internal water pressure.

9.5.2.8 The design of the reinforced concrete spiral case structure shall be calculated according to the following working conditions:

a) When the spiral case which does not bear internal water pressure operates normally, the load combination includes the dead weight of the structure, the loads transferred from the generator pier and the fan housing and the live load on the ground of the turbine floor.

b) When the spiral case which bears internal water pressure operates normally, the load combination includes the dead weight of the structure, the loads transferred from the generator pier and the fan housing, the load on the ground of the turbine floor and the internal water pressure.

9.5.2.9 The design calculation for the reinforced concrete spiral case structure should be under the following assumptions:

a) The cracks are acceptable when the spiral case without bearing internal water pressure is designed.

b) The cracks are acceptable when the spiral case that bears internal water pressure is designed; or the crack developing width is limited in the design of the spiral case.

c) The temperature stress will not be taken into account.

9.5.2.10 The generator pier is the supporting structure for the generator and the turbine and bears huge live loads and dead loads; sufficient rigidity, strength and stability shall be ensured by the application of reinforced concrete. The design of the generator pier includes the concrete wall around the generator wind passage (wind shield).

9.5.2.11 The design loads of the generator pier structure include:

a) Dead loads

   1) Dead weight of the generator pier;

   2) Dead weight of the generator floor slab and the live load on it;

   3) Weight of the generator stator;

   4) Weight of the exciter stator and the auxiliary equipment;

   5) Weight of the upper frame;

   6) Weight of the lower frame;

   7) Weight of the turbine.

b) Live loads

   1) Weight of the generator rotor together with the shaft;

   2) Weight of the exciter rotor;

   3) Weight of the turbine rotor together with the shaft;

   4) Axial water thrust of the turbine;

   5) Horizontal centrifugal force;

   6) Normal torque of the generator;

   7) Short-circuit torque of the generator.

9.5.2.12 The design calculation of the generator pier shall be performed under two working conditions, namely normal operation conditions and short-circuit conditions. The load combinations shall comply with the following provisions:

a) Normal operation: The load combination shall include dead loads (1) to (7) and live loads (1) to (6) ;

b) Short-circuit: The load combination shall include dead loads (1) to (7), live loads (1) to (5) and the live load (7).

9.5.2.13 The dynamic calculation of the generator pier shall be performed in line with the following principles:

a) The resonance, amplitude and dynamic coefficient shall be verified.

b) The ratio of the difference between the natural vibration frequency and the forced vibration frequency of the generator pier to the natural vibration frequency shall be more than 20% to 30%, or the ratio of the difference between the forced vibration frequency and the natural vibration frequency to the forced vibration frequency of the generator pier shall be more than 20% to 30% to avoid resonance.

c) The amplitude of the forced vibration of the generator pier shall meet the following requirements: the vertical amplitude shall not be more than 0.1 mm for the long-term combination or not be more than0.15 mm for the short-term combination; the sum of horizontal transverse and torsional amplitudes shallnot be more than 0.15 mm for the long-term combination, or not be more than 0.2 mm for the short-termcombination.

9.5.2.14 The design loads in fan housing load structure include:

a) Dead weight and weight of the generator floor slab.

b) Live load of the generator floor.

c) Temperature stress.

d) Horizontal thrust of the lifting jack on the generator upper frame.

e) Restraint torque applied by the generator floor to the fan housing when the short-circuit torque happens to the generator.

9.5.2.15 The structure of the fan housing should be designed according to the following principles and methods:

a) Its bottom shall be fixed, and the top should be connected to the generator floor slab as a whole.

b) The inner force caused due to the temperature effect should be reduced with consideration given to the influence after the structure is cracked, or the temperature effect may be offset by lowering the design strength of the reinforcement.

c) The maximum crack width of the fan housing should be 0.4 mm in the normal serviceability limit state.

9.5.2.16 The generator set of the bulb tubular unit is mainly supported with the tubular shell so the stress on the mechanism is relatively light and the stress is definite. The load of the rotating part of the unit will be transferred to the tubular shell through the two supporting points of the entire unit, i.e. through the water guide bearing on the turbine end and through the combination bearing on the generator end, then transferred to the concrete and finally transferred to the powerhouse foundation.

a) The load of the bulb tubular unit is usually determined according to the following five conditions:

   1) The runner is emptied.

2) The runner is filled with water.

3) Under rated operating condition.

4) Load shedding condition.

5) Runaway operating status.

b) The water intake section of the runner and the draft tube section are flow passing positions; its structural layout, sectional shape, loads and combination conditions are basically same as the water intake section and draft tube section of the vertical shaft unit. Generally, it may be calculated according to the plane frame on the elastic foundation beam by using the unit width of the structure. In addition to flow passing, the middle section of runner also is the supporting structure of the unit and bears all kinds of live loads and dead loads transferred from the bulb tubular unit. The loads in the middle section of the runner act in two directions, namely the radial direction and the axial direction. Therefore, the structural design of the middle section of the runner shall also take both directions into account. See Table 29 for the loads acting on the middle section of the runner and their combination.

Table 29 - Loads acting on the middle section of the runner and the load combination

Design situation	Limit state	Load combination	Calculation condition	Loads							
				Dead weight	Water weight	Internal water pressure	External water pressure	Uplift pressure	Acting force of unit	Temperature	Seismic force
Persistent situation	Limit state of bearing capacity	Basic combination	Normal operation	√	√	√	√	√	√	√	-
			Overhaul condition	√	-	-	√	√	-	√	-
Transient situation		Accidental combination	Verified flood	√	√	√	√	√	√	-	-
			Earthquake	√	√	√	√	√	√	-	√
Accidental situation			Runaway	√	√	√	√	√	√	√	-
			Short circuit	√	√	√	√	√	√	√	-
Persistent situation	Service-ability limit state	Standard combination	Normal operation	√	√	√	√	√	√	√	-

c) Structural calculation principle and method.

1) The action of the lining for the tubular shell will not be considered in the structural calculation for the middle section of the runner; all the loads will be borne by the reinforced concrete.

2) Under the action of the axial load, as the dimensions of the runner floor and the sections of the two side piers are usually are relatively large, and they are continuous along the water flow direction, their rigidity is sufficient to bear the axial force transferred from the unit; thus, the structural calculation is usually not performed for the floor and the side piers in the axial direction (in the water flow

direction), but they should be appropriately reinforced when laying the reinforcement. The generator well and the turbine well are arranged on the generator roof of the runner, but are not continuous in the axial direction, and the upper column of the tubular shell is buried in the concrete roof between the wells, which is the main force transferring mechanism and bears relatively significant force in the water flow direction; therefore, the inner force in the axial direction should be calculated separately.

3) When the structural mechanics method is used for the calculation, the unit width shall be obtained along the water flow direction under the action of the radial load and calculated as per the plane frame on the elastic foundation.

4) When the structural mechanics method is used for the calculation, the roof is an arch structure on two side piers of the runner; it may be simplified into a rectangular beam with two fixed ends. The concentrated stress of the column on the tubular shell of the roof is relatively great so that the calculation should be usually performed according to the concentrated load on the beam and the hanging bars should be equipped. When the height-span ratio of the beam h/l>0.5 (h is the beam height and l is the net width of beam), the stress analysis and reinforcement arrangement should be performed as per the deep beam.

5) When it is analysed with the finite element method, the middle section of the runner may be used for the overall analysis. The stress is concentrated on the connection between the column of the tubular shell and the concrete so that the reinforcing bars on this position shall be relatively reinforced.

6) In the calculation of the structural static force, the live load shall be multiplied by the dynamic coefficient.

9.5.3 Upper portion structure

9.5.3.1 The loads borne by the crane beam include the dead weight of the beam, the weight of the steel rail and its accessories, the vertical wheel pressure of the crane and the transverse/longitudinal horizontal actions. The standard value of the weight of the steel rail and its accessories shall be determined according to the data provided by the manufacturer, and may be 1.5 kN/m to 2.0 kN/m for the preliminary calculation.For the vertical wheel pressure as well as the standard values of the transverse and longitudinal horizontalactions of the crane, the possible maximum value provided by the manufacturer shall be adopted.

9.5.3.2 The standard value of torque acting on the crane beam may be calculated.

9.5.3.3 The design of the crane beam shall meet the following requirements:

a) The design shall be performed according to the bearing capacity and the deflection shall also be verified according to the normal operational requirements.

b) Maximum allowable deflection in the short-term combination of the crane beam of the electrical bridge crane: $L_0/600$ for the reinforced concrete crane beam; $L_0/750$ for the steel structure (L_0 refers to the calculated span of the crane beam).

c) With regard to the reinforced concrete crane beam, the crack developing width also shall be verified, and the maximum crack in short-term combination shall not be more than 0.3 mm.

d) If the crane in powerhouse of hydropower station is a light-duty working system, the fatigue strength may not be verified for the crane beam.

9.5.3.4 The design of the connection between the crane beam and the column shall meet the partial load bearing, torque resistance and anti-overturning requirements of the supports.

9.5.3.5 The layout of the powerhouse framework shall meet the following requirements:

a) The layout of the columns shall meet the requirements for the installation and overhaul of the electromechanical equipment, usually with the same column interval, and shall also be adaptive to the joints between the unit bays.

b) The column grid spacing shall be uniform if possible.

c) The column should not be arranged directly on the top plate of the draft tube, spiral case or steel pipe.

d) The powerhouse structure shall meet the structural strength requirement, and its rigidity shall also be sufficient. In the normal serviceability limit state, the lateral displacement on the top of the crane beam rail shall not exceed the allowable limit value for normal traveling of the crane, and the maximum displacement of the column at the rail top, in case of the standard combination, should not exceed the allowable values in Table 30.

Table 30 - Allowable displacement value of the column top

S/N	Deformation variety	Calculated as per the plane structure	Calculated as per the space structure
1	Transverse displacement (the roof of the powerhouse has been covered)	H/1800	H/2000
2	Transverse displacement (the roof of the powerhouse has not been covered)	H/2500	
3	Longitudinal displacement	H/4000	
NOTE H refers to the height from the foundation surface on the lower end of the column to the rail top surface of the crane beam.			

e) The actions borne by the powerhouse framework and the action effect combination may be adopted with reference to Table 31.

Table 31 - Action effect combination of the powerhouse framework

Design situation	Limit state	Action effect combination	Calculation condition	Action name											
				Dead weight of the structure	Weight of the permanent electro-mechanical equipment on the roof	Live load or snow load on the roof	Load on the floor of the power plant	Water pressure		Crane load		**Wind load**	**Temperature effect**	**Construction load**	**Earthquake action**
								Design flood level or normal reservoir level	**Verified flood level**	**Crane wheel pressure**	**Horizontal braking force of the crane**				
Persistent situation	Limit state of bearing capacity	Basic combination (I)	1. Crane is fully-loaded	√	√	√	√	√		√	√				
			2. Crane is no-load + wind load	√	√	√	√	√		√		√			
Transient situation		Basic combination (II)	1. Crane is fully-loaded + wind load + temperature effect	√	√	√	√	√		√	√	√	√		
			2. Construction period	√						√				√	
Accidental situation		Accidental combination	1. Crane is no-load + earthquake action	√	√		√	√		√					√
			2. Crane is no-load + verified flood water pressure	√	√		√		√	√					

Persistent situation	Serviceability Limit state	Short-term or long-term combination	Crane is fully-loaded	√	√	√	√	√		√	√				
			2. Crane is no-load + wind load	√	√	√	√	√		√		√			
Transient situation		Short-term combination	1. Crane is fully-loaded + wind load + temperature effect	√	√	√	√	√		√		√	√		
			2. Construction period	√						√				√	

NOTE 1 When the loads effects are combined, the condition that "the powerhouse roof has not been sealed during the construction period" or the condition that "the powerhouse roof has been sealed but the second phase concrete has not been placed for the turbine pit" shall be taken into account; the construction load effect values and their combination shall be determined according to the specific conditions;
NOTE 2 The effect of the framework temperature is determined according to the type of upper structure and the importance .

9.5.3.6 The powerhouse framework may usually be calculated as a plane framework; its calculation diagram shall be determined according to the following provisions:

a) The transverse span of the powerhouse is subject to the axis; for the stepped column with variable cross-sections, the axis passes through the middle point of the minimum cross-section.

b) The height of the lower column is the distance from the fixed end of the column to the top face of the corbel. The height of the upper column is the distance from the top face of the corbel to the top face of the column if it is hinged, or the distance from the top face of the corbel to the centre of the transverse beam when the rigid connection is adopted.

c) When the floor slab (beam) is connected to the column with simple support, the restraint of the slab (beam) to the column may not be taken into account; if the slab (beam) is connected as a whole, it shall be considered on the basis of the fixed hinge, the rigid connection or the elastic joint according to the slab (beam) rigidity.

d) The elevation of the fixed end of the frame column foundation shall be determined according to the constraint condition of the foundation.

e) When the frame column and the roof beam are cast into one piece or the concrete thick plate structure is adopted for roof, the connection between the frame column and the roof shall be considered to employ the rigid connection; when the roof is a roof truss (prefabricated concrete or steel roof truss) structure, the connection between the frame column and the roof truss shall be considered to employ the hinge connection.

9.5.3.7 The longitudinal framework of the powerhouse mainly bears the dead weight of the structure, longitudinal horizontal braking force of the crane, the seismic force, longitudinal wind load, temperature influence and the longitudinal eccentric bending moment generated by the vertical counter-force difference between two adjacent crane beams. The standard value of the longitudinal eccentric bending moment, My, may be estimated according to the formula (35).

$$M_y = \Delta \mathrm{Re} \quad (35)$$

Where

ΔR is the standard value of the counter-force difference between adjacent crane beams, in kN;

e is the eccentric distance to the column centre ΔR, in m.

9.5.3.8 The design of the roof system shall comply with the following provisions:

a) The roof may employ the concrete structure or light steel structure according to the roof load, powerhouse span, construction difficulty and construction period.

b) The roof system shall be designed in combination with the natural environment of the hydropower station, the powerhouse layout and operation requirements, and meet the requirements for drainage, thermal insulation, fire control and earthquake resistance; the roof may employ the thermal insulation sheet; the natural daylighting band may be arranged when necessary.

c) The roof gradient shall be comprehensively selected in combination with the local rainfall intensity, structural style of the roof and building elevation treatment.

9.5.4 Firefighting design

9.5.4.1 Fire resistance rating of the buildings

The fire hazards and fire resistance ratings for the powerhouse are classified as per the corresponding standard.

9.5.4.2 Firefighting access

The net width and vertical space of the firefighting access should not be less than 4.0 m respectively, to ensure that the firefighting truck can reach the entrance to the ground powerhouse. There should be no obstacles that hinder the operation of the firefighting truck between the access and the powerhouse. The firefighting access, firefighting site and underground pipes and ditches should be able to bear the pressure of large trucks. The slope of the open lot, for parking the fire trucks, should not be greater than 3%.any dead end firefighting access should be equipped with a turning path or turnaround.

9.5.4.3 Firefighting compartment

The main powerhouse and auxiliary powerhouse with a height lower than 24 m are generally respectively classified as one firefighting compartment. However, to ensure firefighting safety, key places that easily catch fire and places with special requirements, such as oil tanks, oil treatment rooms, cable rooms, bus corridors and shafts, are separated by firewalls, fire doors, fire windows and fire valves.

9.5.4.4 Safe evacuation

The safe evacuation should not be less than two main exits and auxiliary emergency exits, and one of them shall directlyaccess the ground. The access to the plant can be used as an emergency exit directly to the outdoors.

For each floor under the generator floor, the farthest distance from every working site to its nearest emergency exit cannot be greater than 60 m.

9.5.4.5 Doors, walkways and stairs for safe evacuation

a) The net door width should not be less than 0.9 m and the door should open in the evacuation direction.

b) The net walkway width should not be less than 1.2 m.

c) The stair net width should not be less than 1.1 m with a slope of no more than 45°. The stair net width for the main unit bay should not be less than 0.8 m.

9.5.5 Heating and ventilation

9.5.5.1 Relevant regulations should be implemented in designing the heating, ventilation and air conditioning systems, to meet the requirements of economic rationality, advanced technology, industrial hygiene and environmental protection and to provide the necessary conditions for safe operation of the electromechanical equipment, improvement of operating environment of the power plant and increased labour productivity.

9.5.5.2 Natural ventilation is preferred in a ground powerhouse. When natural ventilation cannot meet the required local indoor air parameter values, a combination of natural ventilation and mechanical ventilation, or mechanical ventilation and local air conditioning can be used.

9.5.6 Structural design

9.5.6.1 Deformation joints should be provided in light of the following requirements:

a) Permanent deformation joints should be provided between the unit bay and its adjacent buildings such as the dam, assembly bay and auxiliary powerhouse.

b) The intervals between the permanent deformation joints of the unit bay depend on the foundation features, turbine-generator dimensions, structural style, weather conditions, and other conditions. It can be 20 m to 30 m and can be properly increased in the case that related measures are taken.

c) Width of the permanent deformation joints should be determined based on the temperature-related building deformation, settlement, anti-seismic structural requirements and other conditions. The width for buildings on a rock foundation can be 10 mm to 20 mm and can be increased for its upper structure.The width for buildings on a soft foundation should be calculated based on the non-even deformation ofthe foundation.

d) To ensure the width of the permanent deformation joints, filling materials could be placed in the joints. The filling materials should be flexible and applicable to the deformation.

9.5.6.2 Waterstop and material selection should meet the following requirements:

a) Reliable waterstop should be placed in the permanent deformation joints and the setting of the waterstop strips should be beneficial to the structure to in order to bear the forces. If necessary, holes and pipes can be installed to drain the leakage from the waterstop facilities.

b) Waterstop materials can be of copper sheet, stainless steel sheet, rubber, plastics, asphalt and macromolecule synthetic materials, selected as per the width of the deformation joint, the water pressure, environmental conditions and its location.

c) Waterstop extended into the foundation rock must be properly connected to the foundation and a burial depth into the rock foundation of 300 mm to 500 mm is recommended.

10 Engineering safety monitoring

10.1 General provisions

10.1.1 Necessary monitoring facilities shall be arranged according to the dam grade, dam height, geological conditions, structural type and features. The main tasks of the safety monitoring design include:

a) To monitor the working state and safety of the project structures during the construction period, storage period and operation period;

b) To inspect the design and guide the construction and operation;

c) To collect data for scientific research.

10.1.2 The project safety monitoring scope shall include the dam body, dam foundation, dam abutment, bank slope close to the dam area with major influence on project safety as well as other structures and equipment directly relevant to the project safety.

10.1.3 The safety monitoring design shall comply with the following principles:

a) The safety monitoring system shall be able to reflect the actual operating behaviour of the project and the foundation during the construction period, storage period and operating period;

b) The important monitoring dam section and the general monitoring dam section shall be determined according to the dam height, geological conditions, structural features as well as the representativeness in the dam sections of the same type; the key points shall be highlighted in the layout of the measuring points;

c) The monitoring items shall be arranged with full consideration and laid out co-ordinately. Some important measuring points on the important monitoring section or positions may be monitored with at least two monitoring methods; the instruments for monitoring important physical quantity on key positions may be provided with the standby instrument. The monitoring items shall be arranged and the monitoring instruments shall be specifically laid out in combination with the main factors influencing the project safety;

d) The monitoring instrument and equipment to be selected shall be stable and reliable in performance, and suitable for long-term work in the severe environment. The measuring range and precision of the instrument shall meet the monitoring requirements. The instrument and the equipment for the important monitoring items to be observed over the long term shall be convenient for replacement;

e) The advanced technologies should be adopted, and allowance shall be reserved for the future technical improvements;

f) The automatic monitoring system may be arranged for the SHP project when necessary. When the automatic monitoring equipment is used, the manual observation conditions shall be available as well.

10.1.4 In the safety monitoring design, the following matters shall be emphasized:

a) In coordination with the structural design of the dam body, reasonably lay out the observation gallery and observation station;

b) Provide favourable traffic, lighting, moisture prevention, windproof, drainage, thermal insulation and security conditions for the monitoring facilities;

c) The embedment and installation of the monitoring facilities shall be kept away from the construction disturbance as much as possible. The instruments and cables shall be protected with effective measures;

d) The predicted change scope of the observed values should be proposed for the main monitoring items according to the theoretical calculation or the model test results;

e) Attention shall be paid to the safety monitoring design for the construction period and the first storage period, and the reference values for the measuring points shall be obtained in a timely manner for the main monitoring items. Before water filling for the first time, the detailed monitoring plan shall be prepared. If the permanent monitoring facilities have not been completed or the monitoring conditions have not been provided before water filling for the first time, corresponding temporary monitoring measures shall be taken;

f) According to the specific conditions of the project, the monitoring technical requirements should be raised for the monitoring items.

10.2 Safety monitoring design

10.2.1 The monitoring of the gravity dam

a) The monitoring of the gravity dam should focus on the dam body deformation and foundation seepage. The monitoring items can be determined in light of the dam height, and project features as well as the geological conditions.

b) The layout of the deformation monitoring facilities shall meet the following requirements:

   1) The horizontal displacement of the dam body and the dam foundation should be monitored with the tension wire alignment method, vacuum laser alignment method and normal line method. If the dam axis is relatively short and the conditions are favourable, the horizontal displacement of the dam body may also be monitored with the collimation line method, or the air laser collimation method. For the end of the collimation line, the inverted plumb line shall be used as the operation control point.

   2) The deflection of the dam body should be monitored with the normal line method.

   3) The horizontal displacement of the surface layer of the bank slope and the landslide mass close to the dam area should be monitored with the triangulation network, the collimation line method and the intersection method. The deep horizontal displacement may be monitored with the inverted plumb line group, multiple position extensometer, deflectometer or clinometers.

   4) The important fault structure or the weak structural surface within the scope of the dam foundation should be monitored with the inverted plumb line group, clinometers or the multiple position extensometer.

   5) The vertical displacement of the dam body and dam foundation should be monitored with the precise levelling method and the vacuum laser alignment method. It may also be monitored with the fluid static levelling method according to the specific conditions. The starting datum mark for the precise levelling measurement should be laid out on the bank slope bedrock near the dam. The stability of the starting datum mark shall be periodically inspected with the benchmark. The benchmark shall be arranged in the downstream region of the dam which will not be influenced by the deformation of the reservoir area. The vacuum laser alignment system and the fluid static levelling measurement line shall be arranged in the horizontal gallery of the dam body; the operation control point for the vertical displacement shall be arranged on both ends and its measuring points should be arranged in coordination with the precise levelling measuring points.

6) The vertical displacement of the bank slope and the landslide mass close to the dam mass should be monitored with the precise levelling method, the settlement meter or the multiple position extensometer. The alpine region may also be monitored with the triangular elevation method. The triangular elevation method may be combined with the triangulation network method to obtain a "three-dimensional network" when necessary.

7) The tilting of the dam body and the dam foundation should be monitored with the precise levelling method, the tilt meter or the fluid static levelling method.

c) The layout of the seepage monitoring facilities shall meet the following requirements:

1) The longitudinal monitoring section and the transverse monitoring section shall be laid out according to the project scale, geological conditions of the dam foundation and the seepage control engineering measures; 1 to 2 longitudinal monitoring sections should be selected and at least 3 transverse monitoring sections should be selected; the uplift pressure of the dam foundation may be monitored with the piezometer tube or the osmometer.

- The longitudinal monitoring section should be laid out on the first drainage curtain line. One measuring point should be laid out in each dam section. In the dam section with complex geological conditions, the quantity of measuring points should be appropriately increased.
- The transverse monitoring sections should be laid out in the highest dam section, bank slope dam section and dam section in the valley bank platform with the complex geologic structure. The spacing between transverse monitoring sections should be 50m to 100m; in the region where the geological conditions of the dam foundation are simple, the spacing may be greater.
- At least 3 measuring points should be laid out on each monitoring section. The measuring points shall be laid out in front of the anti-seepage curtain when necessary. When there is a downstream anti-seepage curtain, the measuring points shall be laid out on its upstream side.

2) For monitoring the deep seepage pressure of the dam foundation, the piezometer tube or the osmometer shall be specifically laid out according to the geological conditions of the dam foundation and the existing main geological flaws. When there is a large fault or a strong permeable zone, the measuring points shall be laid out along the possible seepage direction.

3) For monitoring the dam body seepage pressure, one row of ohmmeters should be arranged in the dam body concrete between the upstream dam surface and the dam body drainage pipe, between two adjacent drainage pipes of the dam body, on the horizontal construction joint along the water flow direction and between the upper and lower horizontal construction joints to monitor the seepage pressure of the horizontal construction joints and the dam body concrete.

4) For monitoring seepage around the dam, 2 to 3 monitoring sections shall be arranged along the flow line behind the anti-seepage curtain for the dam abutments on both banks; at least 3 measuring points shall be arranged in each monitoring section. The hole for the piezometer tube shall reach the strong permeable stratum, and be drilled through the underground water line before the dam is built. A few measuring points may be arranged in front of the anti-seepage curtain when necessary.

5) For monitoring the seepage, the measuring weir should be laid out by sections on the drainage ditch of the dam foundation gallery to monitor the seepage of the dam foundation, dam body, river bed and both banks respectively. When the leakage is relatively significant due to the defects, cold joints and cracks in the dam body concrete, the leakage shall be collected and then measured with the volume method. With regard to the drainage hole with relatively significant leakage, the leakage should be measured in a single hole with the volume method.

6) For analysing the water quality, the representative drainage holes or the monitoring holes for seepage around the dam shall be selected, the water shall be periodically sampled to analyse the water quality and compare it with the reservoir water quality; if any precipitate is found or the water flowing out is corrosive, the water shall be sampled for total analysis.

d) The layout of the stress, strain and temperature monitoring facilities shall meet the following requirements:

1) One monitoring section vertical to the dam axis as well as one or several horizontal monitoring sections shall be laid out along the centreline of the dam section in the important monitoring dam section;

2) The stress and strain monitoring instruments should be laid out in a concentrated manner on the important monitoring sections and the monitoring cross sections. When necessary, the periphery of the representative large openings and the gallery, the position near the junction face between the concrete and the bedrock or other positions with complex stress shall be selected to lay out the measuring points.

3) The important monitoring dam section may be used as the temperature monitoring dam section. The measuring points shall be laid out according to the state of the dam body temperature field, and in combination with the dam face temperature and the dam foundation temperature. The temporary temperature monitoring during the construction period should be combined with the permanent temperature monitoring.

4) In the important monitoring dam section, the joint meters may be laid out on different elevations of the longitudinal and transverse joints to be grouted. In the bank slope dam section, the joint meters should be laid out on the contact surface between the concrete and the bedrock according to the specific condition. With regard to the positions which may have cracks, the crack meter should be laid out in the concrete.

5) The pre-stressed anchor bolt or pre-stressed anchor cable shall be sampled to monitor the changes in the stress state;

6) The measuring points of the reinforcement stress may be laid out in the important reinforced concrete structures.

10.2.2 The monitoring of the arch dam

a) The routine monitoring of the arch dam should focus on the deformations to both the dam body and the arch support as well as the seepage. The monitoring items can be determined as per the dam height, project features and geological conditions.

b) The monitoring of the horizontal displacement and the deflection shall comply with the following provisions:

1) The horizontal displacement of the dam body and the dam foundation may be monitored with the normal line method, quasi-linear method, triangulation network, forward intersection method and the traversing method.

- The horizontal displacement of the dam body and the dam foundation should first be monitored with the normal line method.
- With regard to the ends of the quasi-linear method and the traversing method, the inverted plumb line shall be arranged as the operation control point.

- The fixed point for the intersection method may be verified with the triangulation network.
- The stability of the inverted plumb line used as the operation control point shall be periodically verified with the horizontal monitoring control network.

2) The horizontal displacement of the arch support and the bank slope surface close to the dam area may be monitored with the triangulation network or the trilateration network, the intersection method and the quasi-linear method. The horizontal displacement of the arch support and the bank slope surface close to the dam area, as well as the horizontal displacement due to geological flaws like faults and fissures may be monitored with the inverse plumb group, or monitored with electric measuring instruments such as a bedrock deformation gauge, multiple position extensometer and borehole inclinometer which should be laid out according to the various conditions.

3) The deflection of dam body should be monitored with vertical line method. There shall be at least three deflection measuring points in monitoring dam section.

c) The monitoring of the vertical displacement and the tilting shall comply with the following provisions:

1) The vertical displacement of the dam body and the dam foundation should be monitored with the precise levelling method. It may also be monitored with the fluid static levelling method according to the specific condition.

- The starting datum mark for the precise levelling measurement should be laid out on the bank slope bedrock near the dam. The stability of the starting datum mark shall be periodically inspected with the benchmark. The benchmark shall be arranged in the downstream region of the dam which will not be influenced by the deformation of the reservoir area or will be slightly influenced.
- The fluid static levelling method applies to the monitoring of the vertical displacement of the dam body and the dam foundation in the horizontal gallery of the dam body; its measuring points should be laid out in combination with the precise levelling points.

2) The vertical displacement of the bank slope and the landslide mass close to the dam area should be monitored with the precise levelling method. The triangular elevation method also may be used in the alpine region. The triangular elevation method may be combined with the triangulation method to obtain a “three-dimensional network” when necessary.

3) The tilting of the gravity arch dam body and dam foundation shall be monitored with the precise levelling method or the fluid static levelling method.

d) The monitoring of seepage shall comply with the following provisions:

1) For monitoring the uplift pressure on the gravity dam foundation, the piezometer tube or the osmometer may be arranged on the longitudinal monitoring section and the transverse monitoring section.

- The longitudinal monitoring section should be laid on the first drainage curtain line behind the anti-seepage curtain; one measuring point should be laid out on each dam section. In the section with complex geological conditions, the quantity of measuring points may be increased appropriately.
- The transverse monitoring section shall be laid along the radial direction; the section position should be determined according to the dam height, dam length, dam thickness and geological conditions. There shall be at least three measuring points for the uplift pressure on the

transverse monitoring section. The measuring points may be laid out in front of the grouting curtain in the important monitoring dam section when necessary.

- Fewer or no monitoring facilities for uplift pressure may be arranged upon demonstration for the thin arch dam with excellent geological conditions.

2) For monitoring the deep seepage pressure of the arch dam foundation, the piezometer tube or the osmometer may be specifically arranged according to the geological conditions of the dam foundation and the existing main geological flaws to monitor the seepage pressure for the deep part of the dam foundation and the bedrock on the arch support.

3) The monitoring of the dam body seepage pressure may not be performed for the thin arch dam body; for the gravity arch dam, the osmometer may be arranged for monitoring if the drain pipe efficiency of the dam body and the seepage pressure distribution of the dam body need to be observed.

4) For monitoring seepage around the dam, 2 to 3 monitoring sections shall be arranged along the flow line behind the anti-seepage curtain for the dam abutments on both banks; at least 3 observation holes shall be arranged in each monitoring section. The hole shall reach the strong permeable stratum, and be drilled through the underground water line before the dam is built.

5) For monitoring the seepage, the measuring weir should be arranged on the drainage ditch in the gallery of the dam foundation to monitor the seepage of the dam foundation and the dam body respectively. With regard to the drainage holes with relatively high seepage, the measurement should be performed in a single hole with the volume method.

e) The monitoring of the stress, strain and temperature shall comply with the following provisions:

1) The monitoring section and the monitoring cross-section of the dam body should be selected according to the dam height, dam length, shape, dam body structure and geological conditions, and in accordance with the arch system and the beam system.

- The vertical monitoring section perpendicular to the dam axis may be arranged along the radial direction on the arch crown, 1/4 arch or cantilever beam with a large opening.
- The monitoring cross-section shall be arranged on the position with maximum arch support stress.
- The monitoring dam section for the arch dam temperature shall be the important monitoring dam section of the safety monitoring system.
- The monitoring section should be laid out along the central section of the dam section.

2) With regard to the layout of the monitoring instruments, the strain and stress monitoring instruments shall be laid out in a concentrated manner on the monitoring section and the monitoring cross-section the of arch dam. The measuring points may be laid out on the representative opening, the gallery and the dam joint when necessary. The monitoring point of the dam body temperature shall be laid out according to the status of the temperature field

1) The tangential thrust and the radial shearing force of the arch support shall be the key monitoring points for the arch dam stress. In addition to the strain gauge, the compression stress meter may also be arranged in the thrust direction of the arch to directly monitor the tangential arch thrust.

2) The quantity and layout of the instruments in the strain-gauge arrays shall be determined according to the stress state of the monitoring points.

3) In the stressed zone of the arch dam, the dam heel or on other possible boundary positions with tensile stress, the crack meter may also be laid out to monitor the possible cracks or the combination situation of the concrete and bedrock in addition to the strain gauge.

4) In the temperature monitoring dam section, 3 to 7 monitoring cross-sections may be laid out according to the different dam heights. 3 to 5 measuring points may be laid out on the intersecting line between the monitoring cross-section and the central section of the dam section. On the position near the dam face with a relatively steep temperature gradient or around the large opening, the quantity of measuring points may be appropriately increased. When the sunlight difference between both banks of the arch dam is relatively significant, the temperature measuring points should be respectively laid out on the downstream surfaces of the left and right arch abutments. Additional temperature measuring points may be arranged on the stress monitoring cross-section of the arch support, if necessary.

5) For monitoring the dam foundation temperature, the 5 m to 10 m deep holes may be laid out at thebottom of the temperature monitoring section, and the temperature gauges may be buried at differentdepths.

6) The temporary temperature monitoring during the construction period should be combined with the permanent temperature monitoring.

7) For monitoring the opening changes in the transverse joints or longitudinal joints on the arch dam, the central position of the controlling dam joint grouting area may be selected to lay out the joint meter.

10.2.3 The monitoring of the concrete faced rockfill dam

a) The monitoring facilities for the concrete faced rockfill dam shall be laid out in line with the following principles:

1) The internal deformation monitoring shall be laid out in combination with the external deformation monitoring to reflect the working state of the dam.

2) The observation points for the displacement of the outer surface may be laid out at equal intervals.

3) For internal monitoring, at least one monitoring transverse section shall be laid out at the position with the maximum dam height; with regard to dams of grade 1 and grade 2, the quantity of the monitoring transverse sections shall be increased, and the monitoring longitudinal sections should be laid out along the dam axis.

4) The internal monitoring facilities should be kept away from the construction disturbance, be convenient for operation and be able to ensure the monitoring of the necessary items under adverse weather condition.

5) The monitoring items like deformation and seepage shall be emphasized; the concrete face deformation, three-dimensional deflection of the peripheral joint, the dam body displacement and seepage shall be particularly monitored.

b) The predicted scope of the monitoring value shall be determined, and the type and measuring range of the monitoring instruments shall be selected according to the design calculation results and with reference to the monitoring results for similar projects.

c) The following monitoring items shall be arranged:

1) Vertical displacement and horizontal displacement of the dam face;

2) Vertical displacement in the dam body, horizontal displacement along the river direction and horizontal displacement along the dam axis;

3) Joint displacement;

4) Face deformation and strain;

5) If the dam foundation has a covering layer, the settlement monitoring item shall be arranged for the dam foundation covering layer;

6) Seepage.

10.2.4 The monitoring of the rolled earth-rock dam

a) The observation facilities shall be arranged for the earth and rockfill dam. The observation items may be determined according to the importance of the project, the dam type, dam height and the geological conditions.

b) The observation of the earth and rock-fill dam mainly includes routine visual inspection and external observation. The observation items to be arranged shall mainly include the surface settlement and displacement, seepage, the turbidity of the seeped water and the upstream/downstream water levels.

c) 1 to 2 settlement and horizontal displacement observation sections shall be arranged for the earth and rockfill dam along the dam axis; 2 to 3 observation points shall be arranged on the dam crest and the downstream dam slope in each section. The displacement and settlement gage points shall be laid out at the connection between the earth dam and the concrete structure, the positions with the pipe buried under the dam and the position with a change in the depth of filling.

d) The seepage may be observed with the measuring weir method or the volume method, and the turbidity of the seeped water shall be observed.

e) For the dam on a sand gravel covering layer, the observation pipe for the water level in the dam foundation shall be arranged, and 1 to 2 observation sections shall be arranged along the axis of the dam. 2 to 3 observation pipes shall be arranged in each section. The observation pipe for the seepage line of the dam body shall be arranged when necessary.

f) For the dam built on the soft soil foundation, the settlement deformation shall be observed during theconstruction period; along with the rise of the dam body, the observation points for the settlementdisplacement shall be arranged on the upstream/downstream dam slopes and beyond the slope toe; thesections shall be arranged at intervals of 50 m to 100 m along the dam axis; 3 to 5 observation points shallbe arranged in each section. The measuring points during the construction period shall be combined withthe permanent gage points. The observation pipe for the pore pressure of the dam foundation shall bearranged when necessary.

g) When the foundation is collapsible loess, the gage points of the foundation settlement and the measuring points of the dam body settlement displacement may be arranged.

h) The general appearance observation (such as cracks, collapse, upheaval, sand boiling and water burst)shall be frequently and periodically performed for the earth and rockfill dam. The spillway, the gate of the water conveyance tunnel and the hoist shall be periodically inspected to ensure that the gate could beflexibly opened and closed.

i) All the observed data and inspection results shall be sorted and analysed in a timely manner; the measures shall be taken in a timely manner in case of any abnormal phenomenon.

10.2.5 The monitoring of the powerhouse

a) The external monitoring for the powerhouse structures of the hydropower station shall usually include the monitoring of the displacement of the structures, the settlement, uplift pressure of the foundation and the seepage.

b) With regard to the foundation of the powerhouse with poor geological conditions, the necessary ground stress and deformation monitoring shall be arranged according to the foundation treatment design.

c) With regard to the powerhouse foundation having a confined aquifer and the powerhouse foundation having a deep sliding surface, the deep pressure measuring equipment shall be buried in addition to the monitoring of the uplift pressure along the foundation surface of the structure.

d) With regard to the monitoring of slope stability within the powerhouse area, necessary slope displacement deformation, groundwater level and seepage monitoring shall be arranged according to the hydrogeological and engineering geological conditions as well as the engineering protection design.

10.2.6 Slope monitoring

a) Slope monitoring should focus mainly on the stability of the entire slope, with attention paid to the stability of the local portion. The slope deformation should be mainly monitored for its stability; The surface displacement should be mainly monitored in the case where the landslide surface is already determined.

b) The monitoring of both displacement and deformation includes external monitoring (slope displacement and settlement monitoring, crack length and width monitoring) and internal monitoring (underground deformation monitoring, sliding surface or fault activity monitoring).

c) Ground water monitoring includes monitoring of the ground water table and pressure, the discharge at the drainage points and the water quality.

d) The monitoring of the slope strengthening structures includes the stress-strain monitoring of the slide-resistant pile, anti-shear hole, anchorage hole, anchor cable and retaining wall.

e) Special monitoring of important engineering slopes includes the monitoring of the precipitation, crustal stress, earthquake monitoring, etc.

f) One or more representative monitoring profiles should be set considering the geological and engineering features of the strengthening slope, with each profile having at least three monitoring points. The monitoring profile should be combined with both the geological exploration profile and stability analysis profile as much as possible. The layout of the surface displacement monitoring points should be combined with the locations of the underground deformation monitoring points to correlate the surface displacement with the underground deformation.

g) Surface displacement monitoring: Triangulation networks and levelling networks should be set for significant slopes. The geodetic surveying method should be used to monitor the surface observation points. In general, slopes can be monitored using simple measuring methods such as sight line.

h) The monitoring for slope cracks both on the surface and at depth: Three-dimensional or simple joint gauges are used for monitoring according to its importance. Geological patrolling inspection and monitoring of the distribution, quantity and length should also be carried out for the surface cracks.

11 Concrete strength, durability and steel performance

11.1 Concrete strength

11.1.1 The concrete shall meet the strength requirement, and satisfy the durability requirements including for low permeability, frost resistance, low abrasion and anti-scour respectively according to the working conditions and regional climatic conditions of the structures. With regard to the large-volume concrete structure with a relatively high requirement for preventing temperature cracks, the requirements for high expansion and low heat properties shall be taken care of for the concrete in the design, and low heat cement should be selected or the appropriate admixture and additive should be added.

11.1.2 The concrete strength grade shall be determined according to the standard value for the cube compressive strength. The standard value for the cube compressive strength refers to the compressive strength with 95% confidence level measured with the standard test method at the age of 28 days from the cube specimen with the side length of 150 mm which is cast and cured with the standard method. Theconcrete strength grade shall be expressed with the symbol C and the standard value of the cube compressivestrength (in N/mm^2).

11.1.3 The concrete strength grade of the reinforced concrete structure shall not be lower than C20; when reinforcement with reinforcing tensile strength of 400 MPa and above is used, the concrete strength gradeshall not be lower than C25. The concrete strength grade of the pre-stressed concrete structure shall not belower than C40.

11.1.4 The design values f_c and ft for the axial compression and the axial tensile strength of the concrete shall be determined according to Table 32. When the axial compression and the eccentric compression members of the cast-in-place reinforced concrete are calculated, the design value for the concrete strength in the table shall be multiplied by the coefficient 0.8 if the long edge or the diameter of the cross-section is less than 300 mm; if the member quality (such as the concrete placement, cross-section and axis dimensions) can beensured, this limitation may not apply.

Table 32 - Design value of the concrete strength

Unit: N/mm^2

Strength variety	Sym-bol	Concrete strength grade									
		C15	C20	C25	C30	C35	**C40**	**C45**	**C50**	**C55**	**C60**
Axial com-pressive strength	f_c	7.2	9.6	11.9	14.3	16.7	19.1	21.1	23.1	25.3	27.5
Axial tensile strength	f_t	0.91	1.10	1.27	1.43	1.57	1.71	1.80	1.89	1.96	2.04

11.1.5 In the design of the structural members of the concrete structure, the long-term strength of the concrete should not be used. However, the compressive strength at the age of 60 days or 90 days may be used upon sufficient evaluation in accordance with the type of structure, regional climatic conditions and time of load transfer. The ratio of the increase in the compressive strength at different ages of the concrete shall be determined through testing. If no test data is available, the ratio may be used with reference to Table 33.

Table 33 - Ratio of compressive strength at different ages of the concrete

Cement variety	Age of concrete			
	7d	28d	60d	90d
Ordinary portland cement	0.55-0.65	1.0	1.10	1.20
Portland blast furnace slag cement	0.45-0.55	1.0	1.20	1.30
Portland-pozzolana cement	0.45-0.55	1.0	1.15	1.25
NOTE In the table, the value is the ratio when the strength at the age of 28 days is assumed to be 1.0; with regard to the members cured with steam, the increase in the compressive strength along with the age will not be considered; in the table, the influences of the admixture and the additive of the concrete are not considered in the values; in the table, the values apply to the concrete with a concrete strength M30 or lower; the ratio of the compressive strength of concrete with a strength grade higher than M30 shall be determined through testing.				

11.1.6 The compressive or tensile elasticity modulus E_c of the concrete at the age of 28 days may be adopted with reference to Table 36. The Poisson's ratio ν_c of the concrete may be 0.167. The shear modulus G_c of the concrete may be 0.4 times the elasticity modulus E_c of the concrete in Table 34.

Table 34 - Elasticity modulus of the concrete

Concrete strength grade	E_c (N/mm^2)	Concrete strength grade	E_c (N/mm^2)
C15	2.20×10^4	C40	3.25×10^4
C20	2.55×10^4	C45	3.35×10^4
C25	2.80×10^4	C50	3.45×10^4
C30	3.00×10^4	C55	3.55×10^4
C35	3.15×10^4	C60	3.60×10^4

11.1.7 The density of the concrete shall be determined through testing. If no test data is available, the density may be taken as 24 kN/m^3 for plain concrete; and 25 kN/m^3 for reinforced concrete.

11.2 Concrete durability

11.2.1 When a permanent hydraulic concrete structure is designed, the durability requirement for the structure shall be met. In the design, the corresponding durability requirements may be increased according to the category of the environment where the structure is located. The category of the environment may be appropriately upgraded or downgraded according to the actual status of the protective measures for the structure surface as well as the expected construction quality control level, but the category of the environment shall not be lower than category I nor higher than category V. The durability requirement may not be increased for temporary structures.

11.2.2 The durability requirements for concrete structures shall be designed according to the design service life of the structure and the environment category specified in Table 35. The service life of the structure refers to the period of time during which the structure only needs general maintenance (including painting of the member surface) but does not require an overhaul. When the technical conditions cannot ensure all the structural (components) members of the structure reach the equivalent durability level commensurate

with the design service life of the structure, the timing of the overhaul or replacement for such structural (components) members within the design service life shall be specified in the design. For all the structural members requiring overhaul or replacement, the construction and operating conditions for repair or replacement shall be considered. With regard to the structural members which cannot meet the repair conditions within the service life, their design service life shall be same as the overall design service life of the structure.

Table 35 - Environment categories for hydraulic concrete structures

Environment categories	Conditions
I	Indoor normal environment
II	Indoor humid environment; outdoor environment; underwater or underground for long term
III	Water level changing region, underground environment with corrosive groundwater; under seawater
IV	Atmospheric region on the sea; light salt mist action region
V	Environment in which de-icing salt is used; seawater level changing region and wave splashing region; atmospheric region on the sea within the scope of 15m above the Mean Sea level; heavy salt mist action region; environment with serious corrosive medium action
NOTE 1 The boundary between the atmospheric region at sea and the wave splashing region is the design maximum water level plus1.5 m; the boundary between the wave splashing region and the water level changing region is the design maximum water level minus1.0 m; the boundary between the water level changing region and the underwater region is the design minimum water level minus 1.0 m;the heavy salt mist action region refers to the onshore outdoor environment within the scope of 50 m from the flood tide line; the light salt mist action region refers to the onshore outdoor environment within the scope of 50 m to 200 m from the flood tide line. NOTE 2 With regard to the structures under environmental conditions of categories II and III with relatively serious freeze thawing, its environment category may be upgraded by one category.	

11.2.3 The designed service lifespan of the SHP station is 50 years. With regard to the hydraulic structure with a design service life of 50 years, the basic durability requirement for the reinforced concrete should meet the requirements of Table 36.

Table 36 - Basic requirements for durability of reinforced concrete

Environment category	Minimum strength grade of concrete	Minimum cement dosage (kg/m^3)	Maximum water-cement ratio	Maximum chlorine ion content (%)	Maximum alkali content (kg/m^3)
I	C20	220	0.60	1.0	Not limited
II	C20	260	0.55	0.3	3.0
III	C25	300	0.50	0.2	3.0
IV	C30	320	0.45	0.1	2.5
V	C35	360	0.40	0.06	2.5

NOTE 1 The minimum strength grade of concrete for the pre-stressed concrete structure with steel wire and steel strand should not be lower than M40; the minimum cement dosage should not be less than 300 kg/m^3;
NOTE 2 When the active admixture or additive which could improve the durability is added into the concrete, the minimum cement dosage may be appropriately reduced;
NOTE 3 With regard to the upper structure of the bridge as well as the beam and column structures in the open environment, the concrete strength grade should not be lower than C25;
NOTE 4 The chlorine ion content refers to the percentage of chlorine ion in the cement dosage; the chlorine ions content in the pre-stressed concrete member should not be more than 0.06%;
NOTE 5 When a non-alkaline reaction aggregate is used, the alkali content in the concrete may not be limited;
NOTE 6 With regard to the structural members of a structure in the environment of categories III and IV and subject to serious frost, the maximum water-cement ratio of the concrete shall meet the frost resistance design requirements of the hydraulic structure;
NOTE 7 In the seawater level changing region and wave splashing region of the hot area, all kinds of basic requirements for the durability of the concrete should be appropriately stricter than those specified in the Table.

11.2.4 When the durability needs to be considered for the plain concrete structure, the basic requirements for durability may be downgraded by one category from the actual environment category and with reference to Table 36 herein.

11.2.5 With regard to the structure with an anti-seepage requirement, the concrete shall meet the provisions of the relevant anti-seepage grade. The anti-seepage grade of the concrete shall be tested according to the standard specimen at the age of 28 days; and the anti-seepage grades for the concrete include: W2, W4, W6, W8, W10 and W12. The anti-seepage grades also may be measured with the specimen at the age of 60 days or 90 days with reference to the time when the structure starts to bear water pressure. The anti-seepage grades of the concrete for the structure shall be determined according to the head, the hydraulic gradient as well as the downstream drainage conditions, water quality conditions and hazard rating of the infiltration water, and shall not be lower than the value specified in Table 37.

Table 37 - Minimum allowable values for the concrete anti-seepage grades

Item No.	Structural type and operating conditions		Anti-seepage grades
1	Downstream surface of the large-volume concrete structure and interior of structures		W2
2	Water-retaining surface of the large-volume concrete structure	H <30	W4
		30 ≤ H <70	W6
		70 ≤ H <150	W8
		H ≥ 150	W10
3	Downstream face of the structural members of the plain concrete and reinforced concrete structure, where the water can seep freely	I < 10	W4
		0 ≤ I < 30	W6
		30 ≤ I < 50	W8
		I ≥ 50	W10

NOTE 1 H refers to the head (m) and i refers to the hydraulic gradient;
NOTE 2 When the dedicated reliable impervious barrier has been laid on the surface of the structure, the concrete anti-seepage grade specified in this table may be appropriately downgraded;
NOTE 3 With regard to the structures subject to corrosive water action, the concrete anti-seepage grade shall be evaluated through dedicated tests, but shall not be lower than W4;
NOTE 4 With regard to the structural members (such as the cut-off wall of the foundation) buried in the foundation, the concrete anti-seepage grade may be selected according to the provisions of Item 3 in this Table;
NOTE 5 With regard to the structural members of plain concrete and the reinforced concrete structures in which the water may seep freely from the downstream face, the concrete anti-seepage grade may be downgraded by one grade according to Item 3 in the table when the head is less than 10m;
NOTE 6 With regard to the structures in the severe cold region, the cold region and with a relatively steep hydraulic gradient, the anti-seepage grade shall be upgraded by one grade according to the provisions in the Table.

11.2.6 The frost resistant grade of the concrete shall be measured with the quick frost test method by using the specimen at the age of 28 days, which contains six grades, namely F400, F300, F200, F150, F100 and F50. Upon testing, the frost resistant grade may also be measured with the specimen at the age of 60 days or 90 days. With regard to the structures with a frost resistance requirement, the frost resistant grades shall be selected with reference to Table 38 according to the climatic regions, frost-thaw cycle times, local micro-climatic conditions of the surface, the degree of moisture saturation and the maintenance conditions. When there are a lot of unfavourable factors, the frost resistance grade may be upgraded by one grade.

Table 38 - Frost resistance grades for concrete

Item No.	Climatic regions	Severe cold		Cold		Mild
	Annual frost-thaw cycle times	≥100	<100	**≥100**	**<100**	**–**
1	Locations subject to severe frost and difficult to treat (1) Tailwater position of the hydropower station, the water level changing region in winter at the inlet/outlet of the storage hydropower station, the second phase concrete of the gate slot, and the rail foundation; (2) Structural members and second phase concrete in the water level changing region of the navigation lock navigable in winter or unnavigable under the influence of the tailwater level of the hydropower station; (3) Overflow surface and second phase concrete ofthe spillway, the glory hole or other water conveyance positions with flow velocity greater than 25 m/s, with floating ice, heavy sediment or heavy bed load; (4) Open reinforced concrete penstock, flume and thin-wall filling gate well with water in winter.	F300	F300	F300	F200	F100
2	Locations subject to severe frost but with ease of treatment conditions (1) Water level changing region in winter on the upstream face of the large-volume concrete structure; (2) Tailrace of the hydropower station or navigation lock, barricade and protection slope of the approach channel; (3) Overflow surfaces of the spillway, water conveyance tunnel and water diversion system with a flow velocity less than 25 m/s; (4) Pavement, platform handrails, cornice, wall, slab, column, pier, gallery or thin-wall of the vertical shaft, prone to snow accumulation, frosting or saturation.	F300	F200	F200	F150	F50
3	Locations subject to relatively severe frost (1) Exposed locations of the large-volume concrete structure on the shadowed side; (2) Channel structures with water or prone to snow accumulation and icing for long duration in winter	F200	F200	F150	F150	F50

4	Locations subject to relatively mild frost (1) Exposed locations of the large-volume concrete structure on the sunny side (2) Dry channel structures without water in winter (3) Underwater thin-wall member; (4) Overflow surface with a flow velocity greater than 25 m/s	F200	F150	F100	F100	F50
5	Concrete under water, in the soil and the internal concrete in large volume	F50	F50	-	-	-

NOTE 1 The annual frost-thaw cycle times refer to the alternate cycle of the air temperature dropping from above +3°C to below -3°C and then rising up to above +3°C in one year and the rise-fall times of the design pre-set water levels when the average daily air temperature is lower than -3°C in one year, whichever is greater;
NOTE 2 The climate zoning standard is as follows:
Severe cold region refers to the region with the lowest average monthly temperature lower than or equal to -10°C over the years;
Cold region refers to the region with the lowest average monthly temperature higher than -10°C, but lower than or equal to -3°C over the years;
Mild region refers to the region with the lowest average monthly temperature higher than -3°C.
NOTE 3 The water level changing area in winter refers to the locations from 0.5m to 1m below the possible minimum water level in winter to 1 m (sunny side), 2 m (shadow side) or 4 m (tailwater region of the hydropower station) above possible maximum water level in winter during the operating period.
NOTE 4 The sunny side refers to the surface which will not be shaded by the massif or building if the most of the days in the winter are clear and the average sunshine time is 4hrs or more. Otherwise, it shall be considered as the shadow side.
NOTE 5 The frost resistant grade of the concrete in the region with the lowest average monthly temperature lower than -3°C should be determined through experimentation according to the specific conditions;
NOTE 6 In the region not required to have frost resistance treatment, the concrete frost resistance grade should not be lower than F50.

11.2.7 The air entraining admixture shall be added into the frost-resistant concrete. The variety and quantity of cement, admixture and additive, the water-cement ratio, mix proportion and air content shall be determined through tests or selected according to the design requirements for frost-resistance of hydraulic structures. The air entraining admixture should be added into the concrete used in the marine environment even though there is no frost resistance requirement.

11.2.8 With regard to the concrete in contact with the corrosive medium, anti-corrosive cement shall be used, quality active admixture shall be added or the protective measures like special surface coating shall be implemented at the same time. At the locations subject to high-velocity flow cavitation damage, the reasonable structural profile shall be used, the ventilation conditions shall be improved, the compaction of the concrete shall be increased, the flatness of the structure surface shall be strictly controlled or the dedicated protective surface layer shall be provided. At the locations subject to sediment abrasion, hard aggregates shall be used, the water-cement ratio shall be reduced, the concrete strength grade shall be upgraded and the construction method shall be improved; wear-resistant surface protective materials or fibre reinforced concrete shall be used when necessary.

11.2.9 When the environment category is category IV or category V, the appearance of the structure shall be uniform, and the thin-wall, regular-shaped and multi-angular structural styles should not be used. With regard to the reinforced concrete surface and locations prone to high concentrations of de-icing salt and serious chlorine salt corrosion, the anti-corrosive materials may be applied by dip-coating or covering; the corrosion inhibitor may be added into the concrete; the load-bearing bar should employ the ribbed bar with epoxy coating; with regard to pre-stressed reinforcement, anchorage and connector, dedicated protective measures shall be taken; with regard to important structures, the cathodic protection measures may be taken after the reinforcement is corroded, and the conditions for implementing cathodic protection in the future shall be provided for in the design and construction.

11.3 Reinforcement

11.3.1 The confidence level for the strength standard value of the reinforcement shall not be less than 95%. The standard strength value of the regular reinforcement is determined according to the yield strength, expressed with f_{yk} and shall be adopted with reference to Table 39; the standard strength value of the pre-stressed steel strand, steel wire, heat-tampered bar and twisted steel is determined according to the ultimate tensile strength, expressed by f_{ptk} and adopted with reference to Table 40.

Table 39 - Standard strength value of the regular reinforcement

Unit: N/mm²

Variety		**Symbol**	**d (mm)**	**f_{yk}**
Hot-rolled steel bar	HPB235 (Q235)	Φ	8~20	235
	HRB335 (20MnSi)	B	6~50	335
	HRB400 (20MnSiV, 20MnSiNb, 20MnTi)	C	6~50	400
	RRB400 (K20MnSi)	C^R	8~40	400
NOTE 1 The diameter d of the hot-rolled steel bar refers to the nominal diameter; NOTE 2 When the diameter of the reinforcement is more than 40mm, reliable engineering practice is to be adopted.				

Table 40 - Standard strength value of the pre-stressed reinforcement

Unit: N/mm²

Variety		**Symbol**	**Nominal diameter d (mm)**	**f_{ptk}**
Steel strand	1×2	φ^S	5, 5.8	1570, 1720, 1860, 1960
			8, 10	1470, 1570, 1720, 1860, 1960
			12	1470, 1570, 1720, 1860
	1×3		6.2, 6.5	1570, 1720, 1860, 1960
			8.6	1470, 1570, 1720, 1860, 1960
			8.74	1570, 1670, 1860
			10.8, 12.9	1470, 1570, 1720, 1860, 1960
	1×3I		8.74	1570, 1670, 1860
	1×7		9.5, 11.1, 12.7	1720, 1860, 1960
			15.2	1470, 1570, 1670, 1720, 1860, 1960
			15.7	1770, 1860
			17.8	1720, 1860
	(1×7)C		12.7	1860
			15.2	1820
			18.0	1720

Stress re-lieved steel wire	Plain steel wire Helical rib steel wire	φ^P φ^H	4, 4.8, 5	1470, 1570, 1670, 1770, 1860
			6, 6.25, 7	1470, 1570, 1670, 1770
			8, 9	1470, 1570
			10, 12	1470
	Indented wire	φ^I	≤5	1470, 1570, 1670, 1770, 1860
			>5	1470, 1570, 1670, 1770
Heat tem-pered bar	40Si2Mn	φ^{HT}	6	1470
	48Si2Mn		8.2	
	45Si2Cr		10	
Twist-ed steel	PSB 785	φ^{PS}	18, 25, 32, 36, 40	980
	PSB 830			1030
	PSB 930			1080
	PSB 1080			1230
NOTE 1 Diameter d of the steel strand refers to the circumscribed circle diameter of the steel strand, i.e. the nominal diameter D_n; the diameter d of the steel wire, heat-tempered bar and twisted steel refers to the nominal diameter; NOTE 2 1×3I refers to the steel strand laid with three indented wires; (1×7)C refers to the steel strand laid with seven wires and subject to die-drawing.				

11.3.2 Tensile strength design value f_y and the compressive strength design value f'y of the regular reinforcement shall be adopted with reference to Table 41; the tensile strength design value f_{py} and compressive strength design value f'_{py} of the pre-stressed reinforcement shall be adopted with reference to Table 42. When reinforcements of different varieties are used in the structural members, each variety of reinforcement shall employ its own strength design value.

Table 41 - Design strength values of the regular reinforcement

Unit: N/mm²

Variety		Symbol	f_y	f'_{py}
Hot-rolled steel bar	HPB235(Q235)	φ	210	210
	HRB335(20MnSi)	B	300	300
	HRB400(20MnSiV, 20MnSiNb, 20MnTi)	C	360	360
	RRB400(K20MnSi)	C^R	360	360
NOTE In the reinforced concrete structure, when the tensile strength (design value) of the reinforcement for the axial tension and the small eccentric tension members is more than 300 N/mm², the value of 300 N/mm² shall beadopted nonetheless.				

Table 42 - Design strength values of the pre-stressed reinforcement

Unit: N/mm²

Variety		Symbol	f_{ptk}	f_{py}	f'_{py}
Steel strand	1×2 1×3 1×3I 1×7 (1×7)C	φ^S	1 470	1 040	390
			1 570	1 110	
			1 670	1 180	
			1 720	1 220	
			1 770	1 250	
			1 820	1 290	
			1 860	1 320	
			1 960	1 380	
Stress relieved steel wire	Plain steel wire Helical rib steel wire Indented wire	φ^P φ^H φ^I	1 470	1 040	410
			1 570	1 110	
			1 670	1 180	
			1 770	1 250	
			1 860	1 320	
Heat-tempering bar	40Si2Mn	φ^{HT}	1 470	1 040	400
	48Si2Mn				
	45Si2Cr				
Twisted steel	PSB 785	φ^{PS}	980	650	400
	PSB 830		1 030	685	
	PSB 930		1 080	720	
	PSB 1080		1 230	820	

11.3.3 The elasticity modulus E_s of the reinforcement may be adopted with reference to Table 43.

Table 43 - Elasticity modulus E_s of the reinforcement

Unit: N/mm²

Variety of reinforcement	E_s
HPB 235-grade reinforcement	2.1×10^5
HRB 335 -grade reinforcement, HRB 400-grade reinforcement and RRB 400-grade reinforcement	2.0×10^5
Stress relieved steel wire (plain steel wire, helical rib steel wire and indented wire)	2.05×10^5
Steel strand	1.95×10^5
Heat-tempering bar and twisted steel	2.0×10^5
NOTE The measured elasticity modulus may be used for the steel strand when necessary.	

Appendix A
(Normative)
Calculation of the wave run-up

A.1 Basic elements for wind wave calculation

A.1.1 Annual maximum wind speed. It refers to the annual maximum value of the average wind speed for 10 minutes at the height of 10m above the water surface; the wind speed at the height Z(m) above the water surface shall be multiplied by the correction factor K_z in Table A.1 before use. If the data from the onshore observation station is used, it shall be corrected to the wind speed at the height 10m above the reservoir water surface with reference to the relevant data. If the observed wind speed data is unavailable, the wind speed may be estimated according to the wind force which occurred in this region with reference to the Beaufort scale for wave calculation. In the coastal region, the condition that the flood level and maximum wave occur at the same time shall be considered.

Table A.1 - Correction coefficient of the wind speed height

Height Z (m)	**2**	**5**	**10**	**15**	**20**
Correction Coefficient K_z	1.25	1.10	1.00	0.96	0.90

A.1.2 The fetch length (effective fetch) shall be determined according to the following conditions:

a) When the water area on both sides of the wind direction is relatively wide, the linear distance from the calculation point to the other side may be used;

b) When the area partially shrinks along the wind direction and the width b of the shrinking position is smaller than 12 times the calculation wave length, the fetch length may use 5 times b, and shall not be less than the linear distance from the calculation point to the shrinking position.

c) When the water area on both sides of the wind direction is narrow or the shape of the water area is irregular, or there is a barrier like an island, the principal ray may intersect with the boundary of the water area against the wind from the calculation point, then several rays shall be made at an interval of 7.5° on both sides of the principal ray and respectively intersect with the boundary of the seawater. As shown in Figure A.1, D_0 refers to the distance from the calculation point to the other side along the direction of the principal ray, D_i refers to the distance from the calculation point to the other side along the direction of ray i; α_i refers to the intersection angle between ray i and principal ray, a_i=7.5i (usually i=±1, ±2, ±3, ±4s, ±5 and ±6); if assuming a_0=0, the equivalent fetch length D may be calculated as per the following formula:

$$D = \frac{\sum_i D_i \cos^2 a_i}{\sum_i \cos a_i} \quad (i = 0, \pm 1, \pm 2, \pm 3, \pm 4, \pm 5, \pm 6) \qquad \text{(A.1)}$$

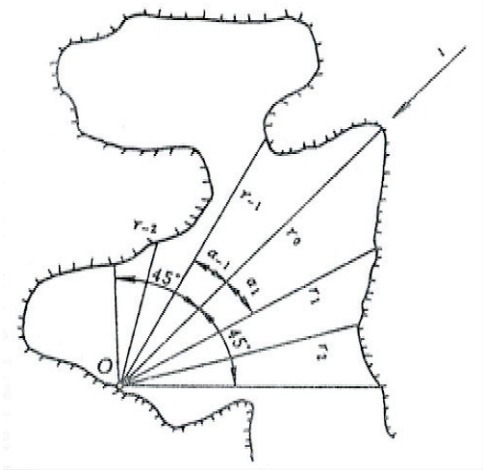

Key

1 prevailing wind direction

Figure A.1 - Calculation schematic diagram of equivalent fetch

A.1.3 Average depth of the sea area in the fetch. Generally, the average depth may be obtained according to the terrain profile prepared along the wind direction; the calculated water level shall be consistent with the static water level under the corresponding design conditions.

A.2 Calculation of the wave parameters

A.2.1 The design wind speed for calculating the wave shall be adopted in accordance with the measured maximum local wind speed data over the years and according to the following provisions:

a) Under normal operating condition(normal water level), the design wind speed shall be 1.5 times the annual average maximum wind speed;

b) Under abnormal operation conditions(check water level), the design wind speed shall be the annual average maximum wind speed.

A.2.2 According to the specific conditions of the proposed reservoir, the wave parameters shall be calculated according to the following three conditions.

a) With regard to the reservoir in the plain and coastal region, they should be calculated according to the formulas (A.2) and (A.3).

$$\frac{gh_{\mathrm{m}}}{v_0^2} = 0.13\mathrm{th}\left[0.7\left(\frac{gH_{\mathrm{m}}}{v_0^2}\right)^{0.7}\right]\mathrm{th}\left\{\frac{0.0018\left(gD/v_0^2\right)^{0.45}}{0.13\mathrm{th}\left[0.7\left(gH_{\mathrm{m}}/v_0^2\right)^{0.7}\right]}\right\} \quad \text{(A.2)}$$

$$\frac{gT_{\mathrm{m}}}{v_0} = 13.9\left(\frac{gh_{\mathrm{m}}}{v_0^2}\right)^{0.5} \quad \text{(A.3)}$$

where

h_m is the mean wave height, in m;

T_m is the mean wave period, in s;

v_0 is the calculated wind speed, in m/s;

D is the fetch length, in m;

H_m is the mean water depth of the water area, in m;

G is the gravity acceleration, take 9.81 m/s^2.

b) With regard to the reservoirs in the hilly and plain area, they should be calculated according to the formulas (A.4) and (A.5) (apply to a deep reservoir, v0<26.5 m/s and D<7.5 km).

$$\frac{gh_{2\%}}{v_0^2} = 0.00625 v_0^{1/8} \left\{\frac{gD}{v_0^2}\right\}^{1/3} \quad \text{(A.4)}$$

$$\frac{gL_m}{v_0^2} = 0.0386 \left(\frac{gD}{v_0^2}\right)^{1/2} \quad \text{(A.5)}$$

where

$h_{2\%}$ is the wave height with a cumulative frequency of 2%, in m;

L_m is the mean wave length, in m.

c) With regard to the reservoir in inland gorge, they should be calculated according to the formulas (A.6) and (A.7) (apply to v_0<20 m/s and D< 20 km).

$$\frac{gh}{v_0^2} = 0.0076 v_0^{-1/12} \left(\frac{gD}{v_0^2}\right)^{1/3} \quad \text{(A.6)}$$

$$\frac{gL_m}{v_0^2} = 0.331 v_0^{-1/2.15} \left(\frac{gD}{v_0^2}\right)^{1/3.75} \quad \text{(A.7)}$$

where

h is the wave height $h_{5\%}$ at a cumulative frequency of 5% when gD/v_0^2 = 20 to 250;

is the wave height $h_{10\%}$ at a cumulative frequency of 10% when gD/v_0^2 = 250 to 1000.

A.2.3 The relationship between wave height h_P at the cumulative frequency of P(%) and the mean weight height may be converted with reference to Table A.2.

Table A.2 - Ratio between wave height h_p and the mean wave height at the cumulative frequency of P(%)

$\overline{H}$ /d	p(%)	0.1	1	2	3	4	5	10	13	20	50
0.0	$H_p/\overline{H}$	2.97	2.42	2.23	2.11	2.02	1.95	1.71	1.61	1.43	0.94
0.1		2.70	2.26	2.09	2.00	1.92	1.86	1.65	1.56	1.41	0.96
0.2		2.46	2.09	1.96	1.88	1.81	1.76	1.59	1.51	1.37	0.98
0.3		2.23	1.93	1.82	1.76	1.70	1.66	1.52	1.45	1.34	1.00
0.4		2.01	1.78	1.69	1.64	1.60	1.56	1.44	1.39	1.30	1.01
0.5		1.80	1.63	1.56	1.52	1.49	1.46	1.37	1.33	1.25	1.01

A.2.4 The mean wave length Lm and the mean wave period Tm may be converted according to the formula (A.8).

$$L_m = \frac{gT_m^2}{2\pi} th \frac{2\pi H}{L_m} \quad \text{(A.8)}$$

A.2.5 The altitude of the wind banked-up hz may be converted according to the formula (A.9).

$$hz = \frac{kv_0^2 D}{2gHm} \cos\beta \quad \text{(A.9)}$$

where

k is thecomprehensive coefficient for friction resistance, use $3.6E^{-6}$;

β is the intersection between the calculation wind direction and the line that is perpendicular to the dam axis, in (°).

A.3 Calculation of the wave run-up

A.3.1 The design wave run-up of the earth and rockfill dam (rockfill dam) employs the run-up value $R_{5\%}$ at the cumulative frequency of 5%. With regard to the dam with a dam height over 30 m, the run-up value $R_{1\%}$ atthe cumulative frequency of 1% shall be used.

A.3.2 Under the direct action of the wind, the run-up of the forward wave on the single slope may be determined with the following method:

a) When m=1.5 to5.0,

$$R_F = \frac{K_\Delta K_V K_F}{\sqrt{1+m^2}} \sqrt{\overline{H}L} \quad \text{..... (A.10)}$$

where

R_F is thewave run-up at cumulative frequency F, in m;

K_Δ is the roughness factor permeability coefficient of the slope, to be valued as per the type of surface protection.

1.0 for bituminous concrete, 0.9 for concrete, 0.75 to 0.8 for masonry and 0.85 to 0.9 for turf;

K_v is the empirical coefficient; to be valued as per Table A.3;

K_F is the conversion ratio for the run-up cumulative ratio, to be valued as per Table A.4;

m is the slope ratio;

$\overline{H}$ is the mean wave height of the wave in front of the levee, in m;

L is the mean wave length of the wave in front of the levee, in m.

Table A.3 - Empirical coefficient K_v

$\frac{V}{\sqrt{gd}}$	**≤1**	**1.5**	**2.0**	**2.5**	**3.0**	**3.5**	**4.0**	**≥5.0**
K_V	1.00	1.02	1.08	1.16	1.22	1.25	1.28	1.30

Table A.4 - Conversion ratio of the cumulative frequency of the run-up K_F

$\frac{\overline{H}}{d}$	**F(%)**	**0.1**	**1**	**2**	**3**	**4**	**5**	**10**	**13**	**20**	**50**
<0.1	$\frac{R_F}{\overline{R}}$	2.66	2.23	2.07	1.97	1.90	1.84	1.64	1.54	1.39	0.96
0.1~0.3		2.44	2.08	1.94	1.86	1.80	1.75	1.57	1.48	1.36	0.97
>0.3		2.13	1.86	1.76	1.70	1.65	1.61	1.48	1.40	1.31	0.99

Note: $\overline{R}$ -mean runup, $K_F = \frac{R_F}{\overline{R}}$

b) When m≤1.25,

$$R_F = K_\Delta K_V K_F R_0 \overline{H} \quad \text{(A.11)}$$

where

R_0 is the relative run-up value of the smooth slope (K_Δ=1) without wind, to be determined according to Table A.5.

Table A.5 - Value R_0

m=cotα	0.00	0.50	1.00	1.25
R_0	1.24	1.45	2.20	2.50

c) When 1.25<m<1.5, it may be determined with interpolation method according to the calculated value from m=1.5 and m=1.25.

UNITED NATIONS
INDUSTRIAL DEVELOPMENT ORGANIZATION

Vienna International Centre
P.O. Box 300 · 1400 Vienna · Austria
Tel.: (+43-1) 26026-0
E-mail: info@unido.org
www.unido.org

INTERNATIONAL NETWORK
ON SMALL HYDROPOWER

136 Nanshan Road
Hangzhou · 310002 · P.R.China
Tel.: (+86-571)87132793
E-mail: secretariat@inshp.org
www.inshp.org