Conference & Multimedia Systems
VIC-M Building

CHECKLIST

Multi Mode to Single Mode

- Regie PC at technician booth of IAEA Boardroom has to be switched on.
- X-Panel icon has to be clicked on. Start Power On activates power supply of technician booth. Crestron Graphic Interface will be shown on PC-screen. (see figures 1,2)
- Change Room Combination button has to be clicked on (Enter Password). (see figure 2)
- Separate Rooms button has to be activated. Audio signal distribution between conference rooms and setup of all CCU units involved is being changed to Single Mode. (see figure 3)
- RF-cabling between Master-Integrus unit (IAEA Boardroom) and Slaved-Integrus units (UNIDO Boardroom, Conference Rooms 1,2,3) has to be disconnected. (see figure 4)
- The DCN-Network Cabling (Plastic Optic Fibre / POF) has to be reconnected to the Integrus Transmitters. (UNIDO BR, CR1,2,3) The POF-Cable from POF/GOF Splitter to CCU has to be disconnected on CCU side to avoid malfunction (remote cable from NCO-Zentrale Technik).
- Integrus Transmitter Setup has to be reconfigured. Setup Item 4A Transmission has to be changed from Slave to On (UNIDO BR, CR 1,2,3) Setup Item 4B Network Mode has to be changed from Disabled to Enabled (UNIDO BR, CR 1,2,3) The IAEA-Integrus Transmitter remains in GC-Setup.
- The Line Array combination has to be reconfigured to single mode via Speakon Patch Bay, pluggable in UNIDO BR, CR 1,2,3. (see figures 5,6)
- After reconfiguring all involved components to Single Mode, the technician booths can be switched off via Crestron Media Control (see figure 7).

Annex 1B1 Multi - Single

figure1:

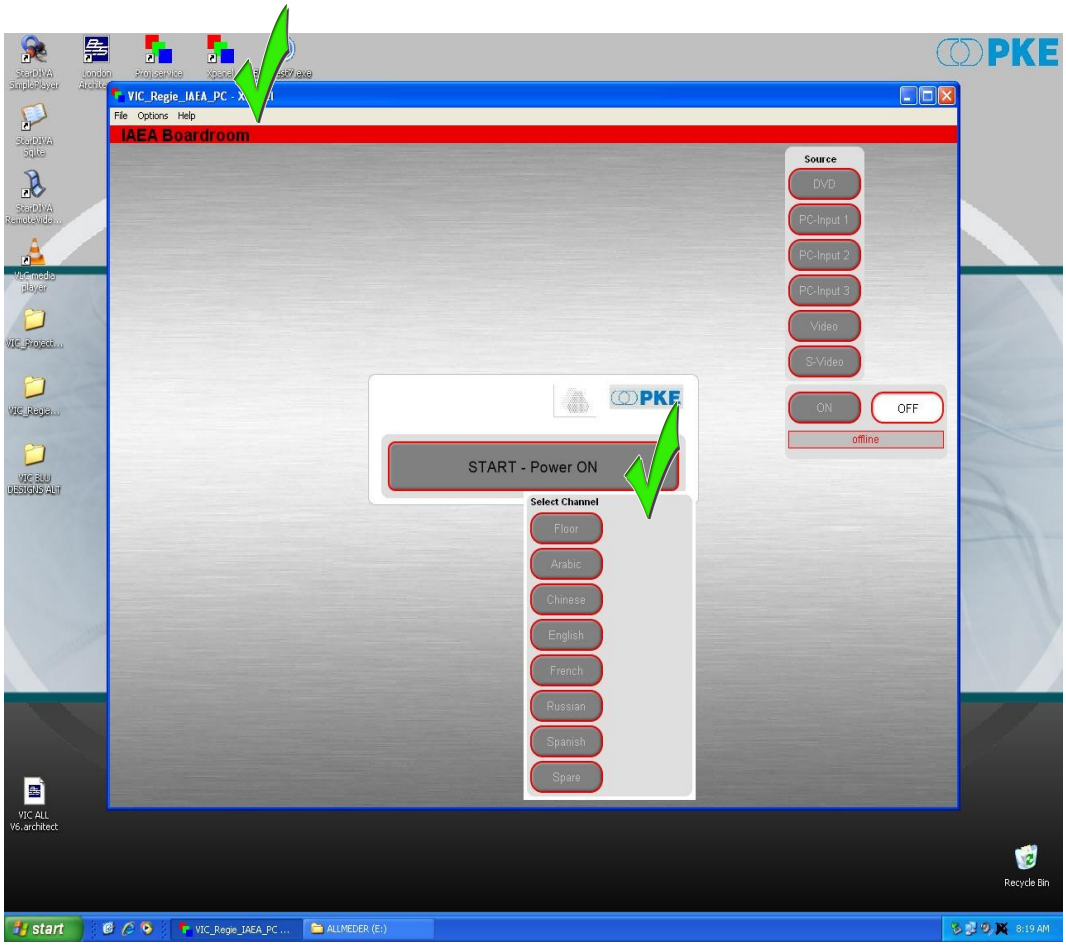

figure 2:

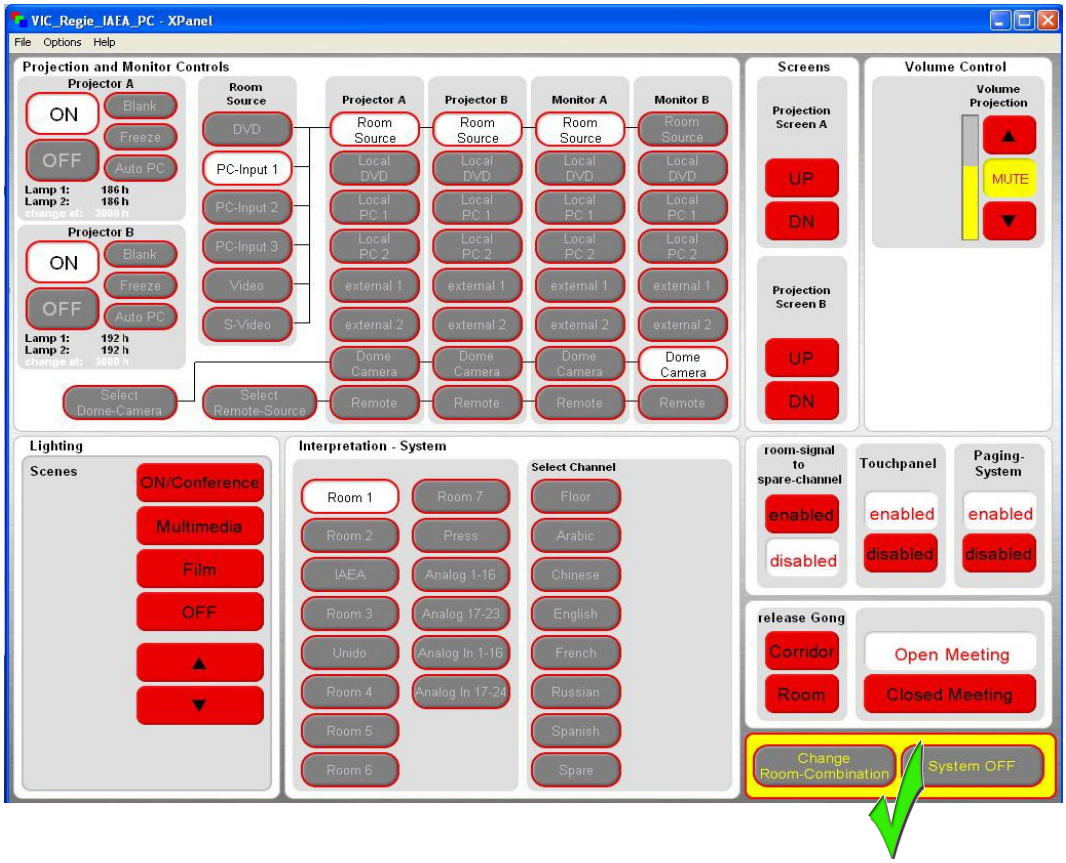

figure 3:

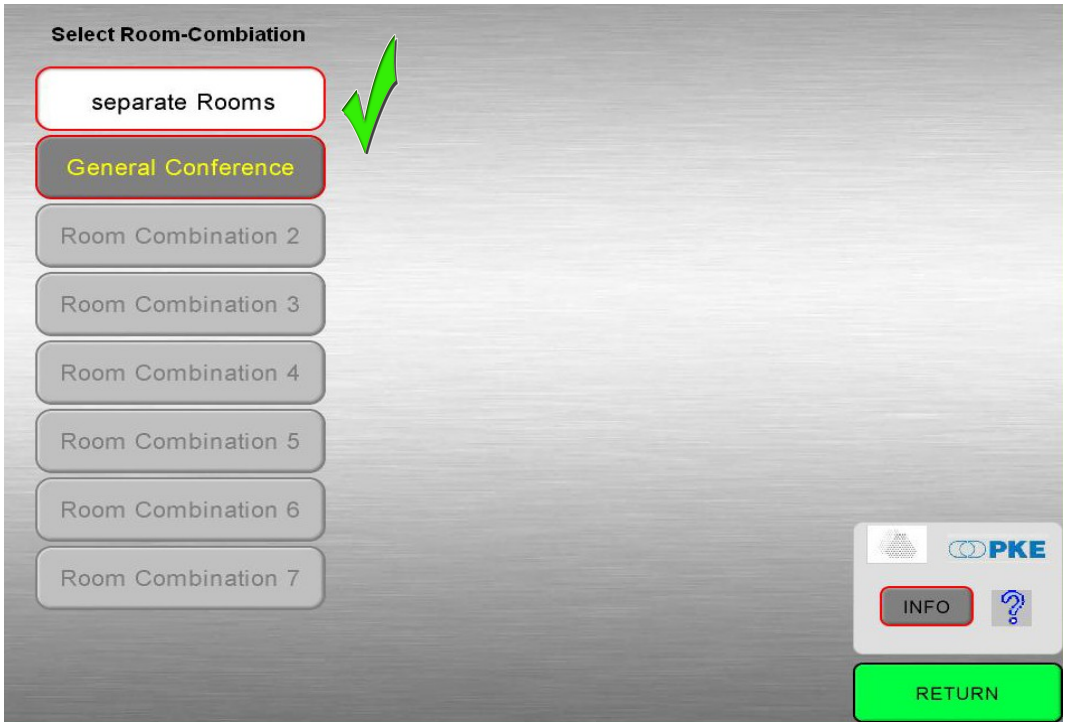

figure 4:

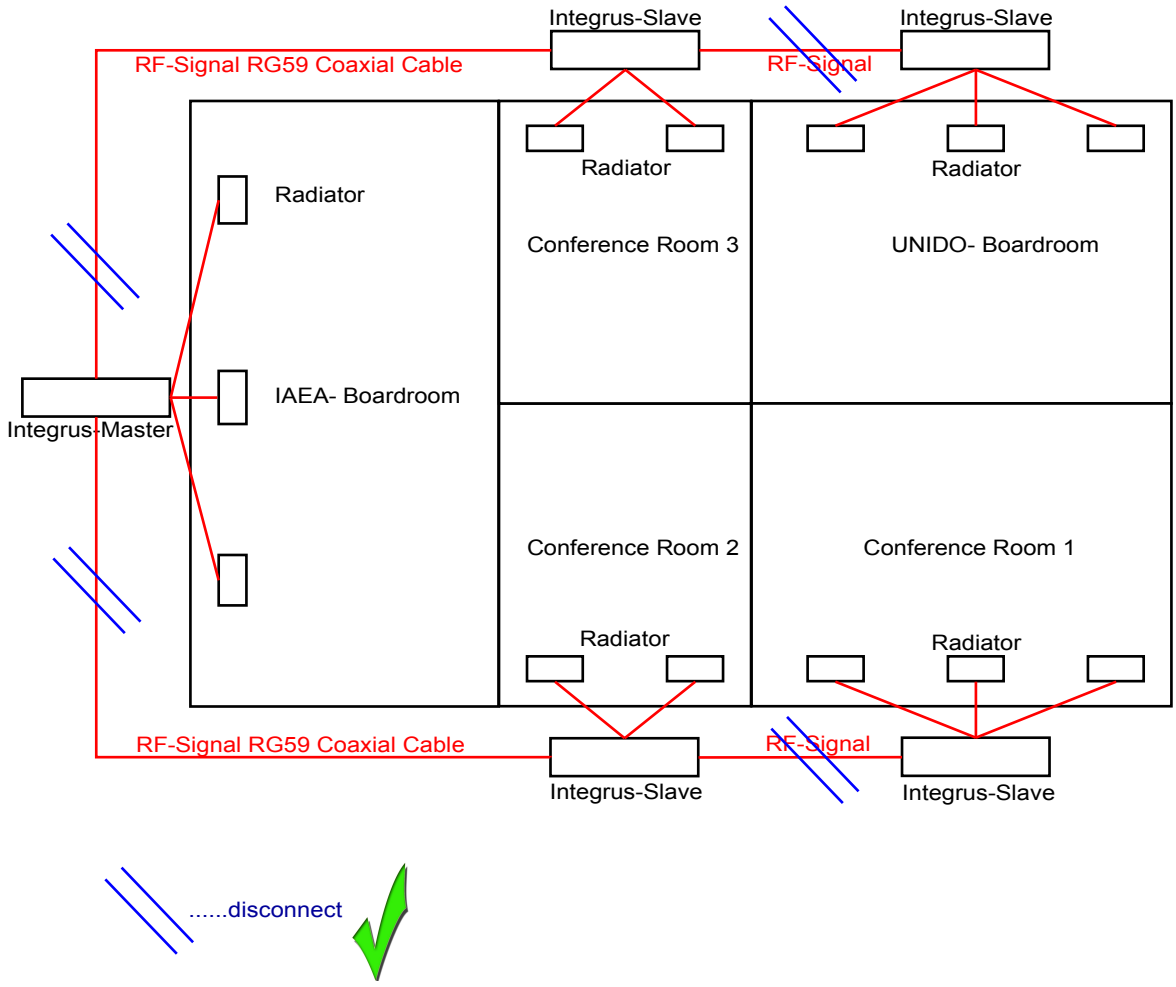

Annex 1B1 Multi - Single

figure 5:

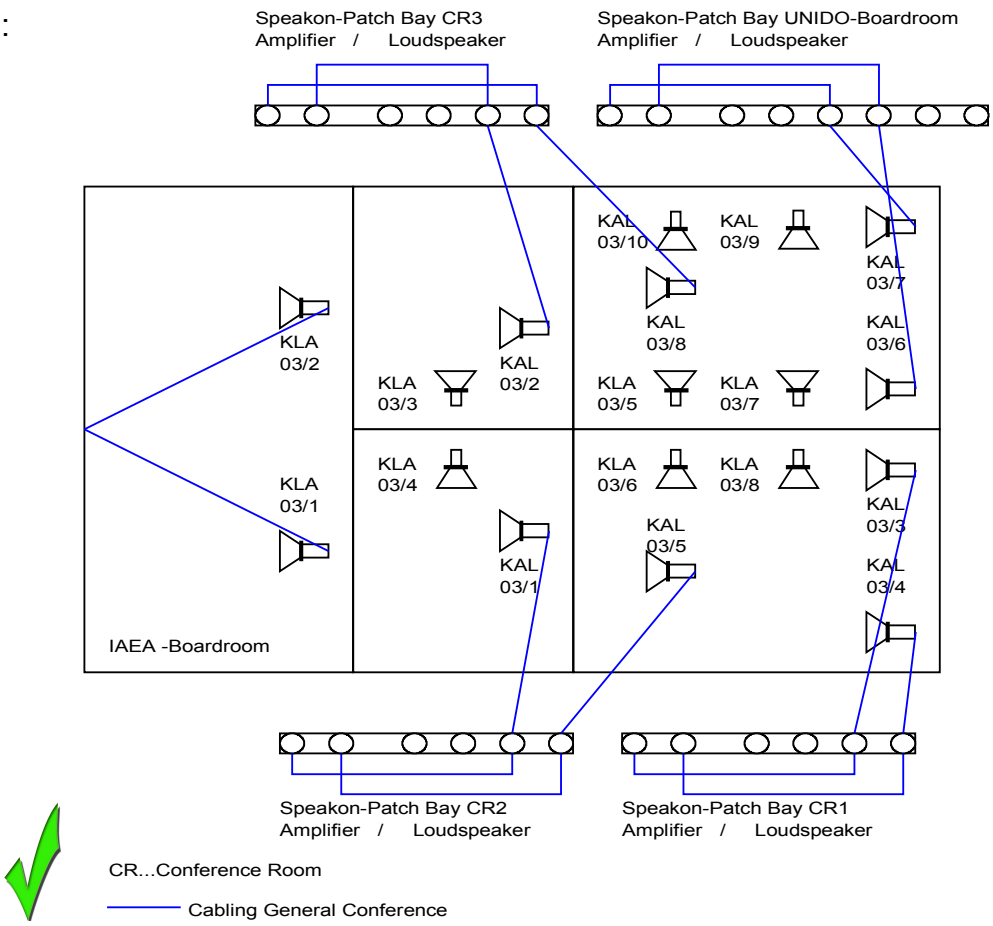

figure 6:

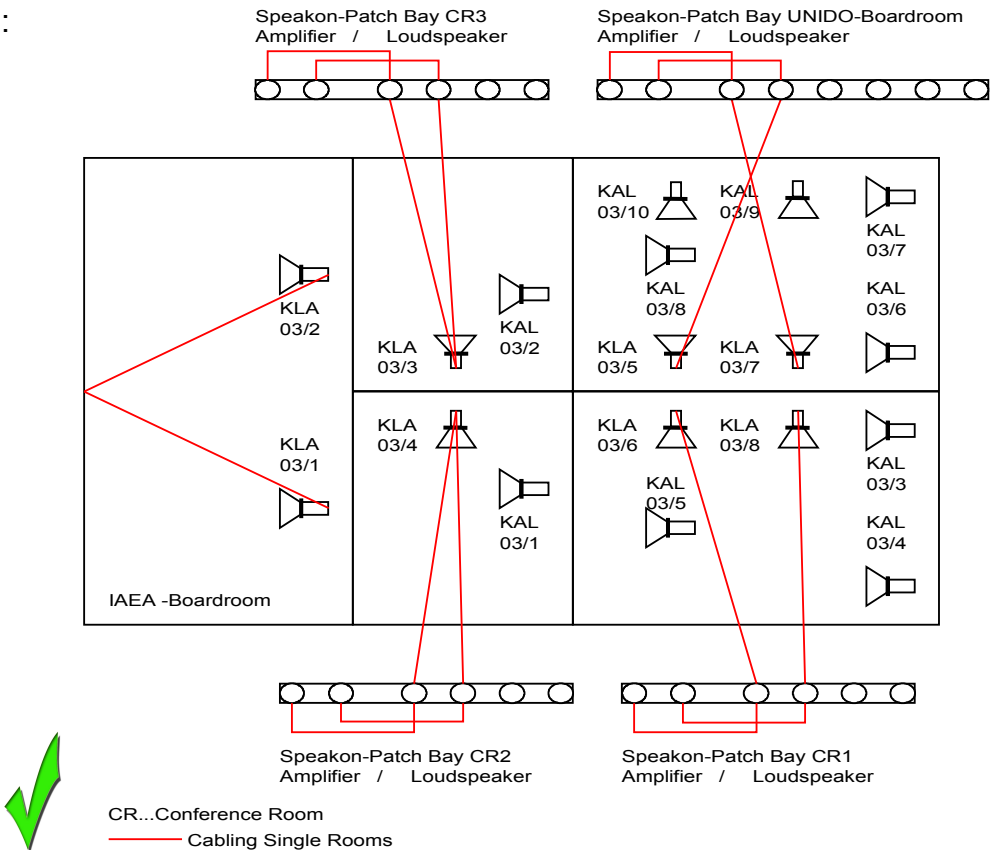

figure 7:

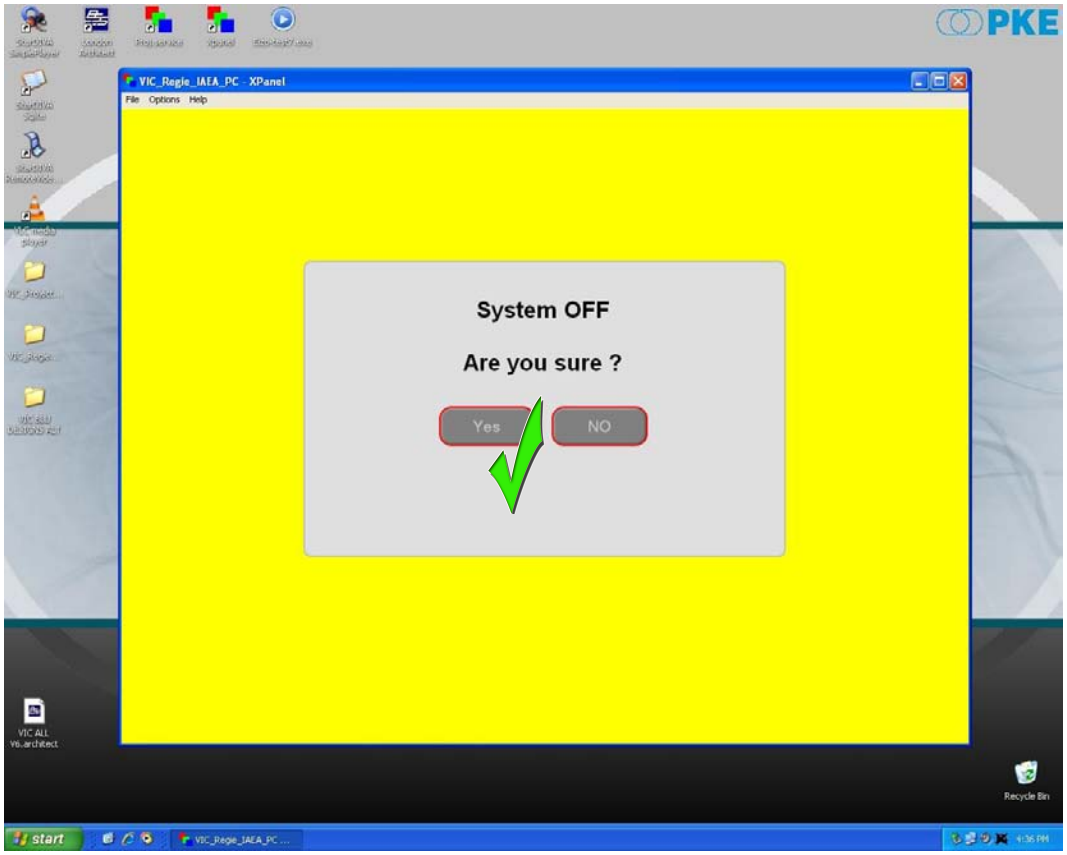
PKE
VIC_Regie_IAEA_PC - XPanel
File Options Help
System OFF
Are you sure ?
Yes
NO
start

Conference & Multimedia Systems
VIC-M Building

C H E C K L I S T

Multi Mode to Single Mode IAEA GC

- Regie PC at technician booth of IAEA Boardroom has to be switched on.
- X-Panel icon has to be clicked on. Start Power On activates power supply of technician booth. Crestron Graphic Interface will be shown on PC-screen. (see figures 1,2)
- Change Room Combination button has to be clicked on. (Enter Password). (see figure 2)
- Separate Rooms button has to be activated. Audio signal distribution between conference rooms and setup of all CCU units involved is being changed to Single Mode. (see figure 3)
- RF-cabling between Master-Integrus unit (IAEA Boardroom) and Slaved-Integrus units (UNIDO Boardroom, Conference Rooms 1,2,3) has to be disconnected. (see figure 4)
- The DCN-Network Cabling (Plastic Optic Fibre / POF) has to be reconnected to the Integrus Transmitters. (UNIDO BR, CR1,2,3) The POF-Cable from POF/GOF Splitter to CCU has to be disconnected on CCU side to avoid malfunction (remote cable from NCO-Zentrale Technik).
- Integrus Transmitter Setup has to be reconfigured. Setup Item 4A Transmission has to be changed from *Slave* to *On* (UNIDO BR, CR 1,2,3) Setup Item 4B Network Mode has to be changed from *Disabled* to *Enabled* . (UNIDO BR, CR 1,2,3) The IAEA-Integrus Transmitter remains in GC-Setup.
- The Line Array combination has to be reconfigured to single mode via Speakon Patch Bay, pluggable in UNIDO BR, CR 1,2,3. (see figures 5,6)
- After reconfiguring all involved components to Single Mode, the technician booths can be switched off via Crestron Media Control. (see figure 7)

figure1:

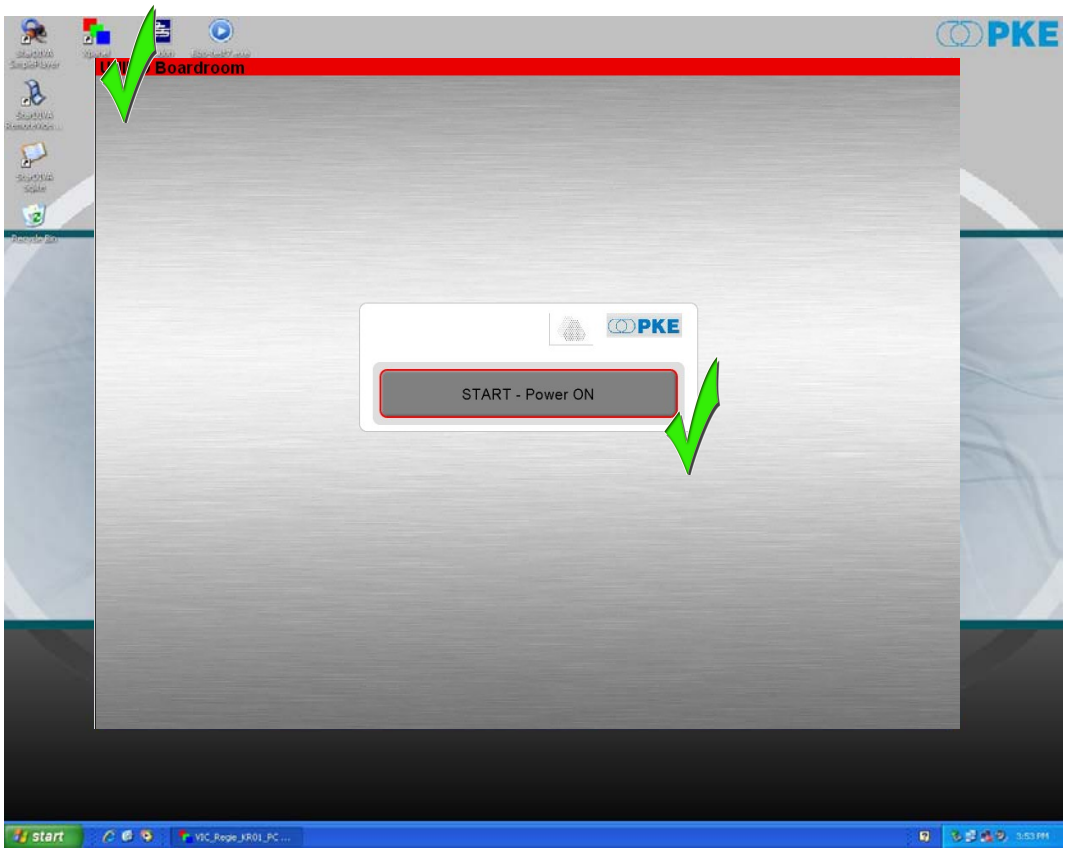

figure 2:

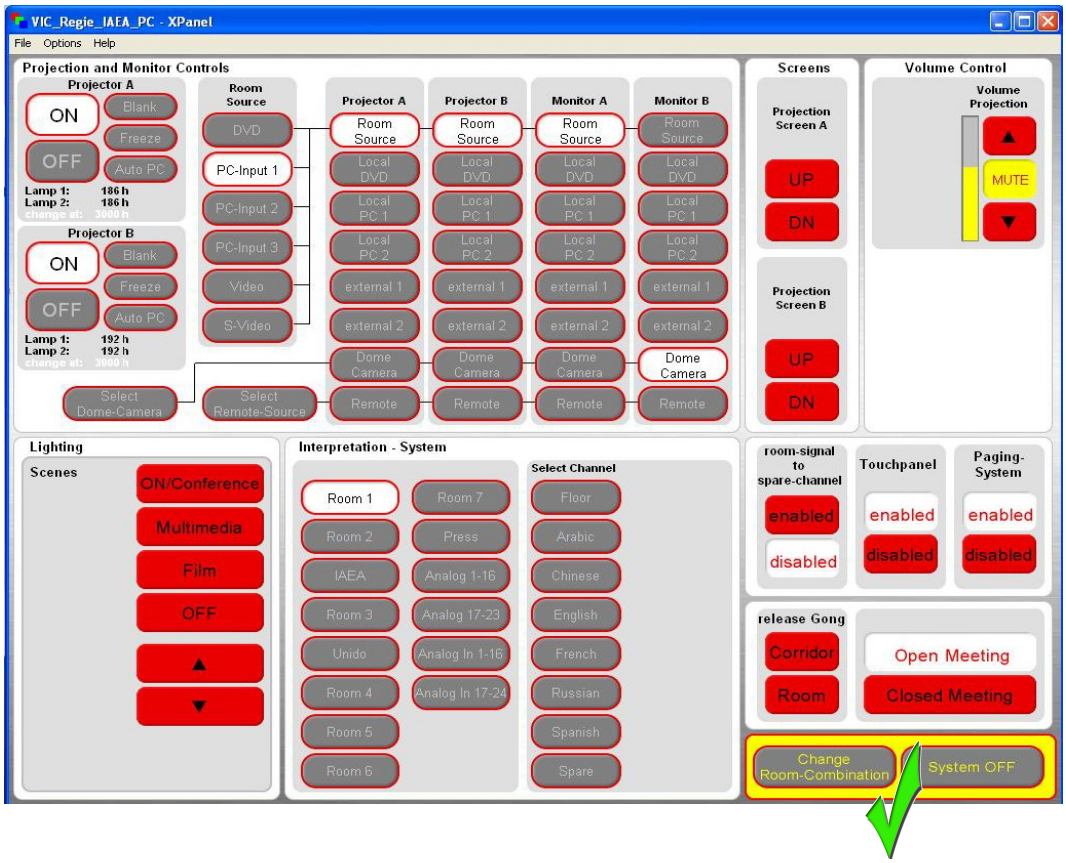

figure 3:

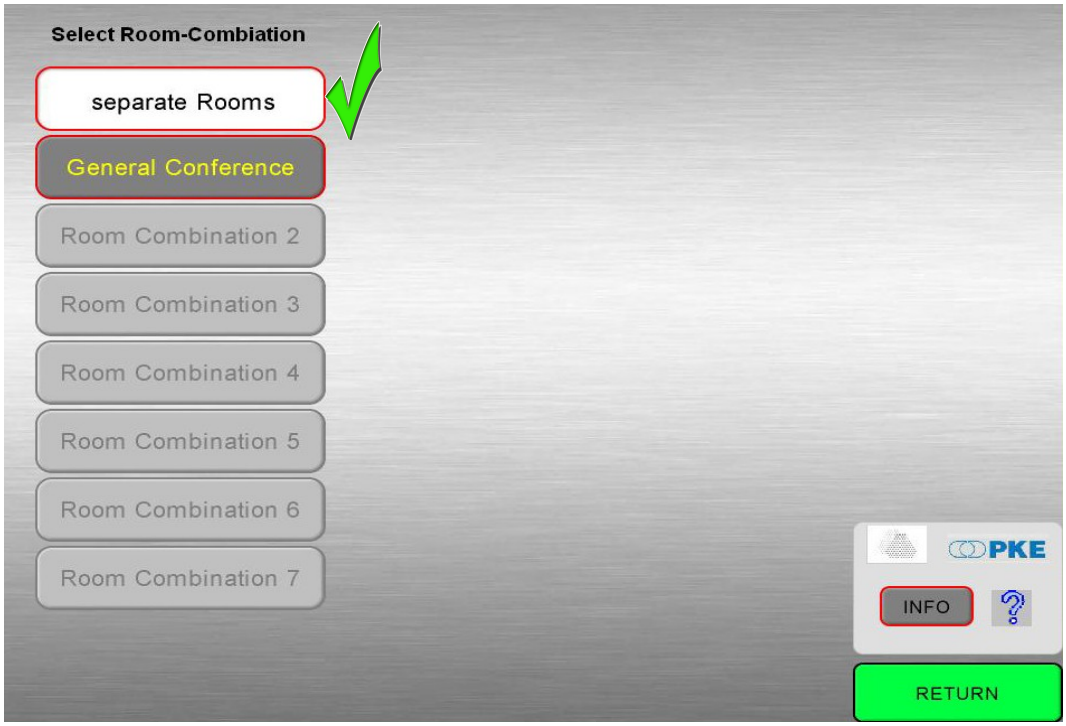

figure 4:

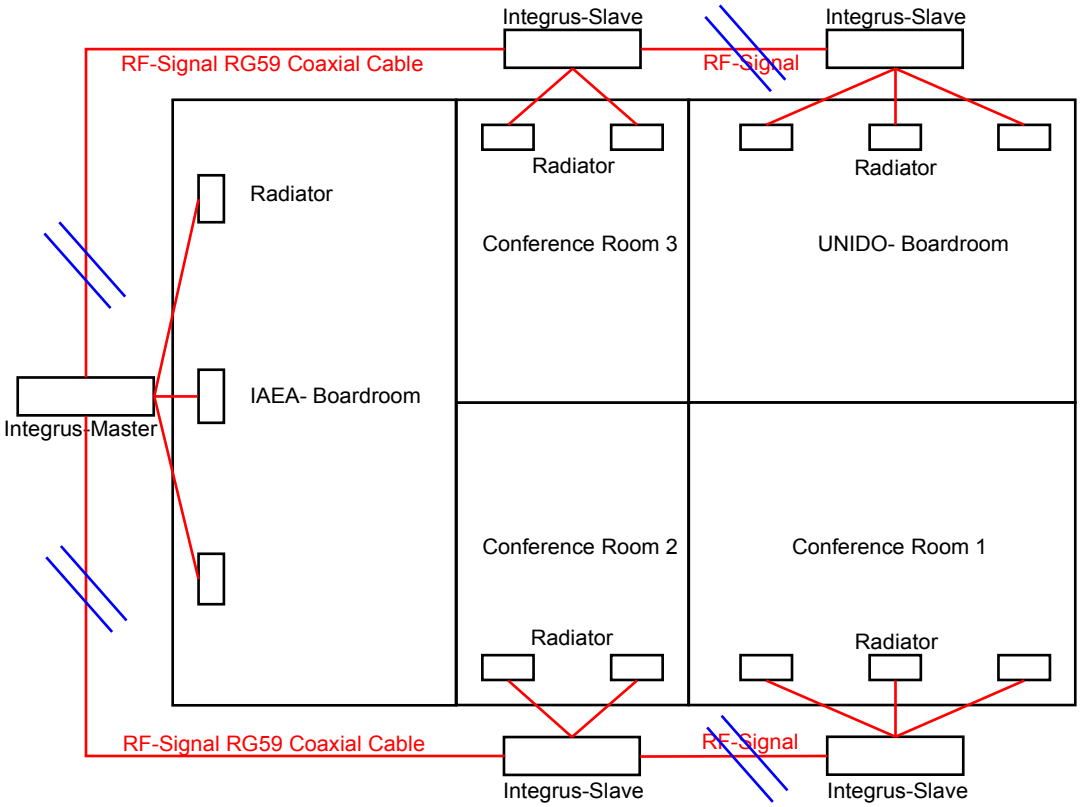

figure 5:

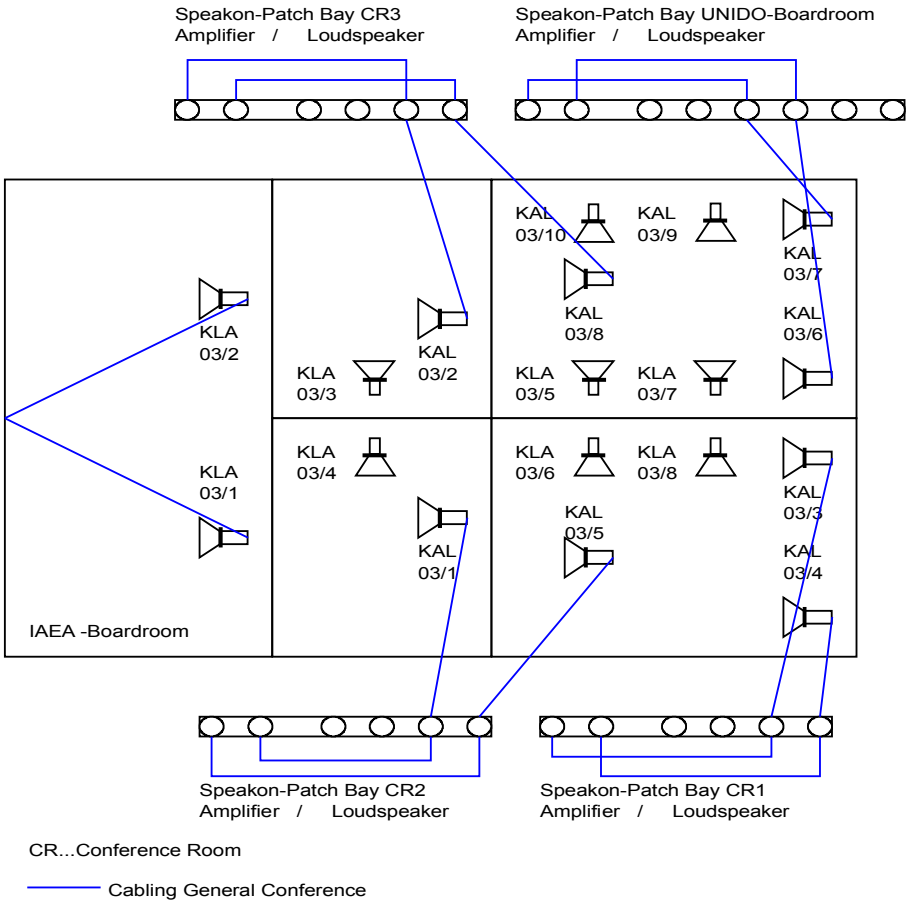

figure 6:

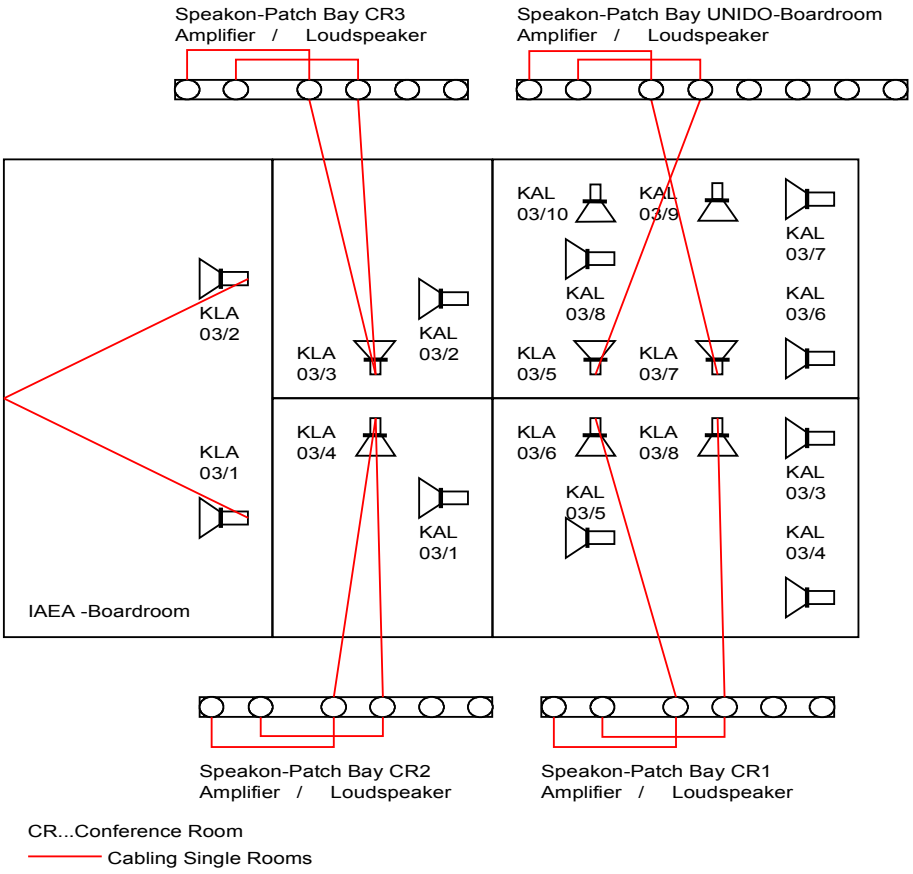

figure 7:

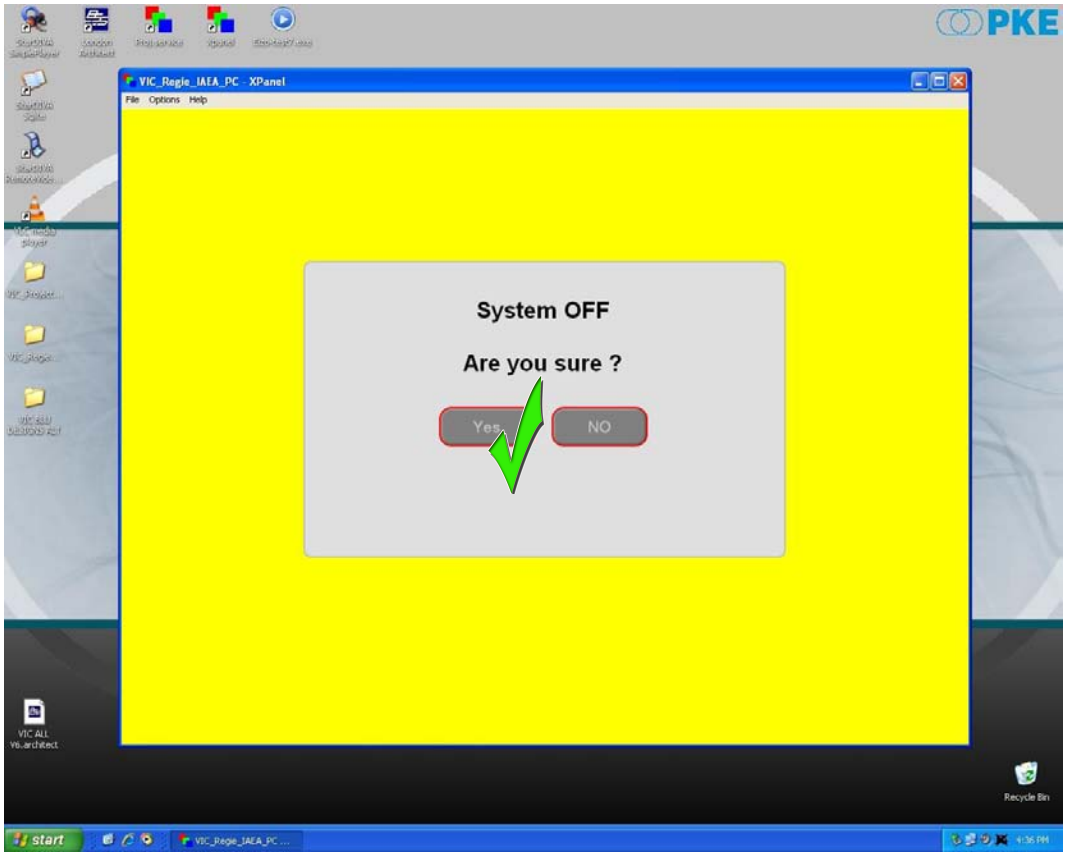
PKE
VIC_Regie_IAEA_PC - XPanel
File Options Help
System OFF
Are you sure ?
Yes
NO
start

Conference & Multimedia Systems
VIC-M Building

C H E C K L I S T

Multi Mode to Single Mode UNIDO GC

- ✓ Regie PC at technician booth of UNIDO Boardroom has to be switched on.
- ✓ X-Panel icon has to be clicked on. Start Power On activates power supply of technician booth. Crestron Graphic Interface will be shown on PC-screen. (see figures 1,2)
- ✓ Change Room Combination button has to be clicked on. (Enter Password). (see figure 2)
- ✓ Separate Rooms button has to be activated. Audio signal distribution between conference rooms and setup of all CCU units involved is being changed to Single Mode. (see figure 3)
- ✓ RF-cabling between Master-Integrus unit (UNIDO Boardroom) and Slaved-Integrus units (Conference Rooms 1,2,3) has to be disconnected.(see figure 4)
- ✓ The DCN-Network Cabling (Plastic Optic Fibre / POF) has to be reconnected to the Integrus Transmitters. (CR1,2,3) The POF-Cable from POF/GOF Splitter to CCU has to be disconnected on CCU side to avoid malfunction (remote cable from NCO-Zentrale Technik).
- ✓ Integrus Transmitter Setup has to be reconfigured. Setup Item 4A Transmission has to be changed from *Slave* to *On* (CR 1,2,3) Setup Item 4B Network Mode has to be changed from *Disabled* to *Enabled* (CR 1,2,3). The UNIDO-Integrus Transmitter remains in GC-Setup.
- ✓ The Line Array combination has to be reconfigured to single mode via Speakon Patch Bay, pluggable in UNIDO BR, CR 1,2,3. (see figures 5,6)
- ✓ The radio microphones (CR 1,2,3) and the media rack (CR1) can be disconnected from BLU 80 inputs as well as the BLU 32 outputs in UNIDO Boardroom.
- ✓ After reconfiguring all involved components to Single Mode, the technician booths can be switched off via Crestron Media Control. (see figure 7)

figure1:

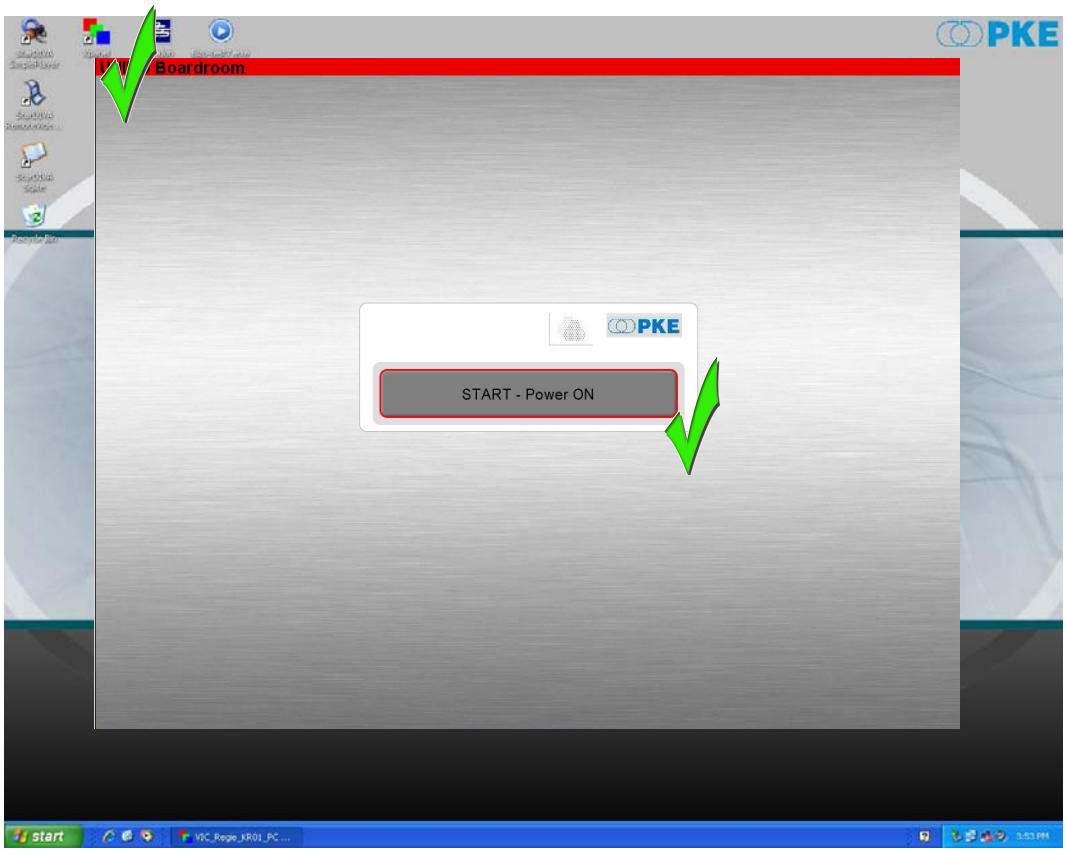

figure 2:

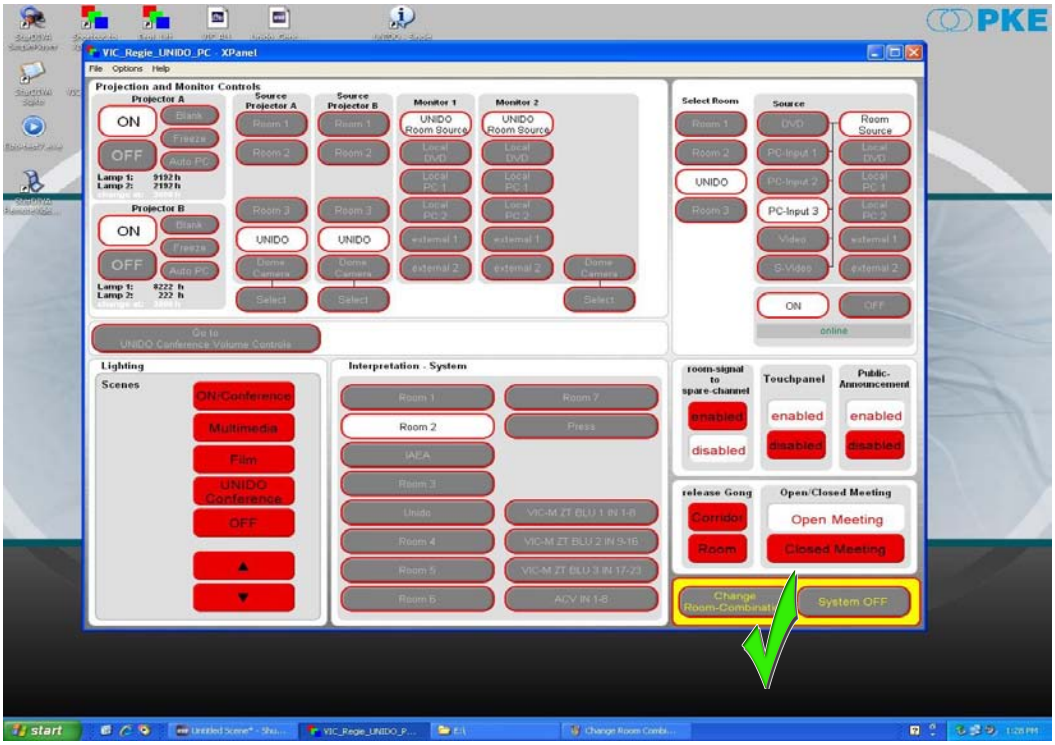

figure 3:

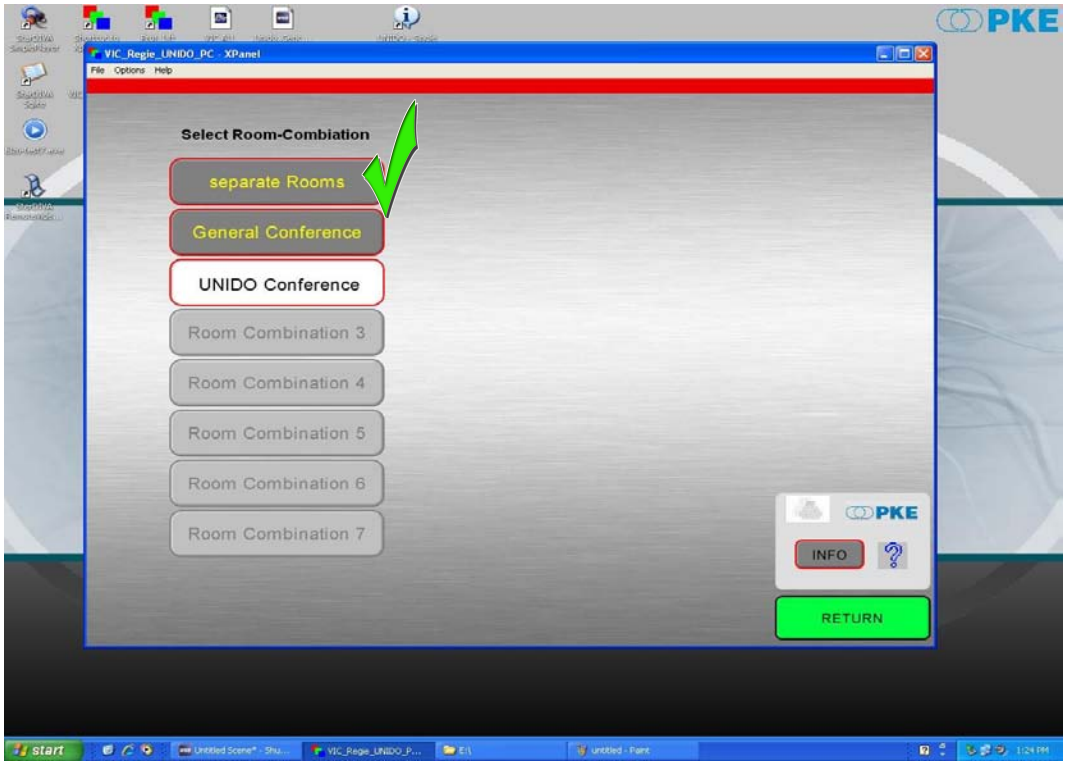

figure 4:

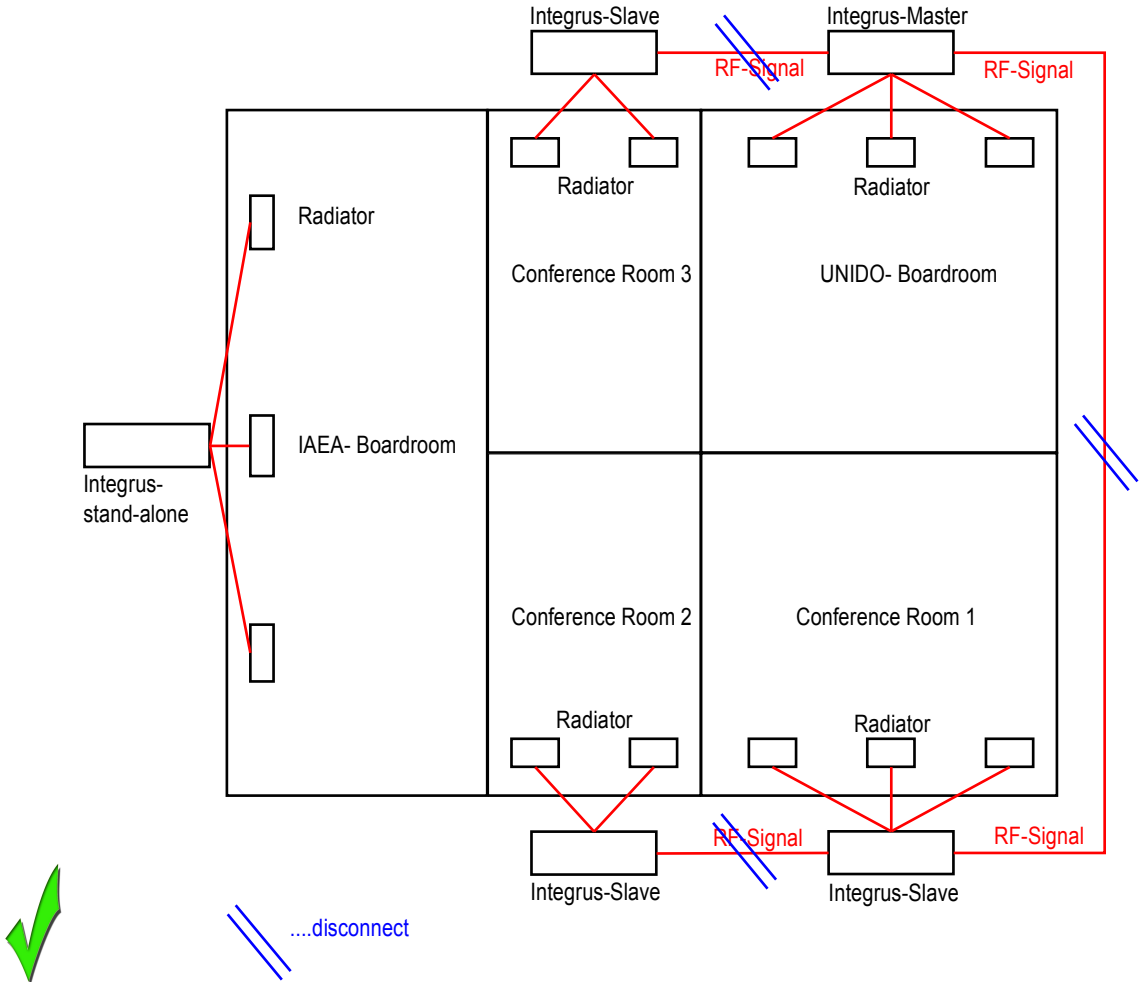

Annex 1B1 Multi - Single UNIDO GC

figure 5:

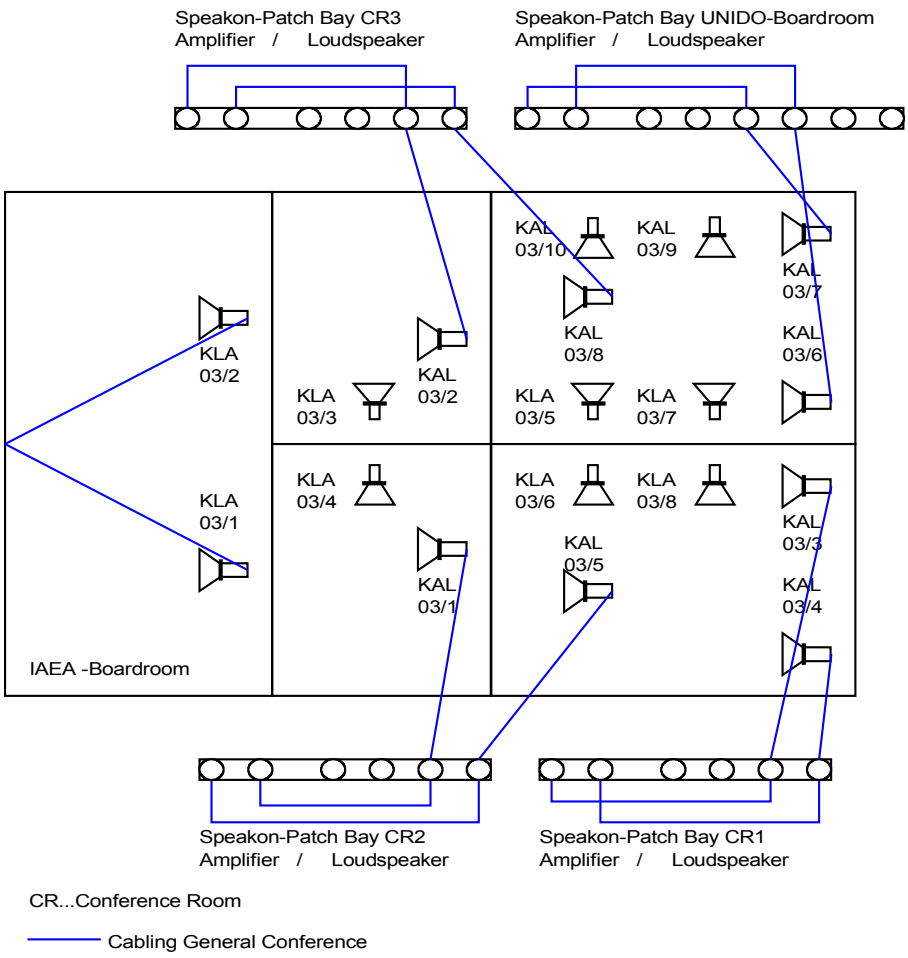

figure 6:

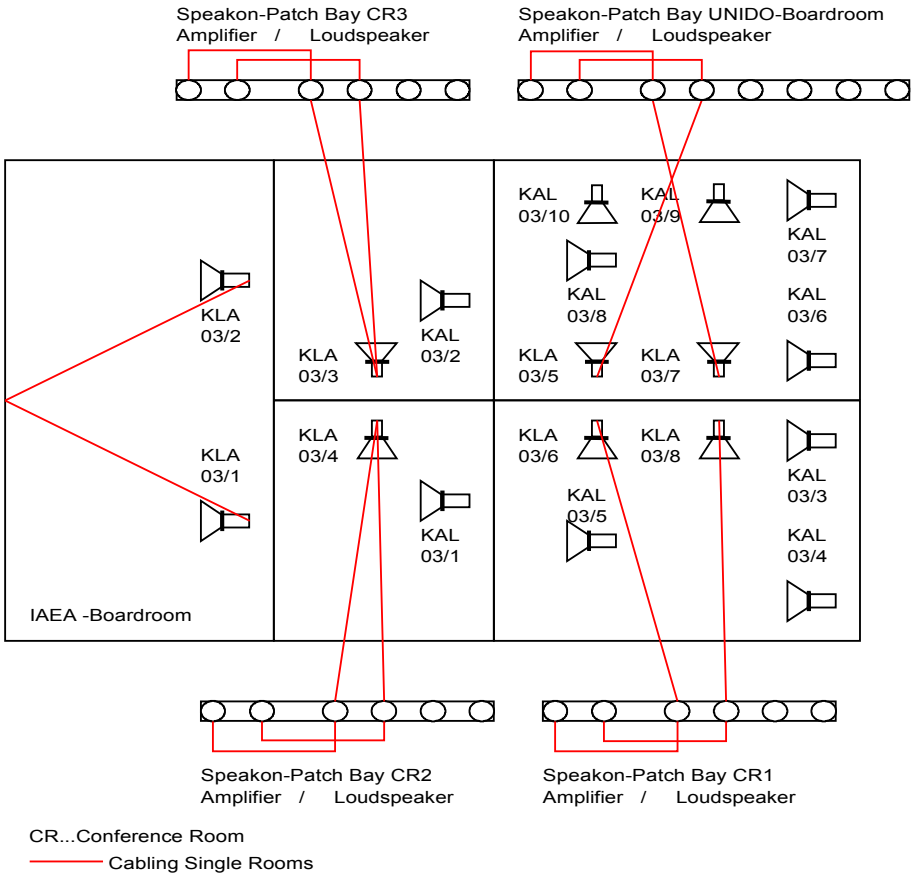

figure 7:

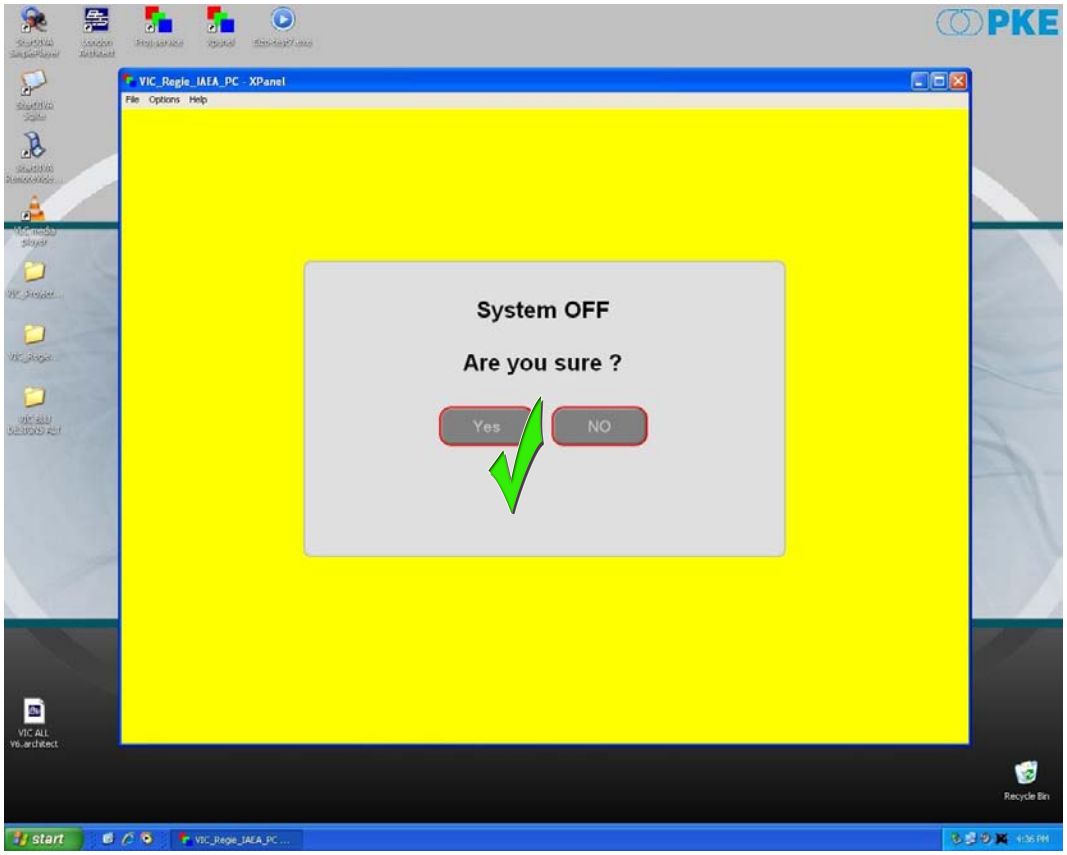
PKE
VIC_Regie_IAEA_PC - XPanel
File Options Help
System OFF
Are you sure ?
Yes
NO
start

Conference & Multimedia Systems
VIC-M Building

C H E C K L I S T

Multi Mode to Single Mode BR-B / M1

- Regie PC at technician booth of M1 has to be switched on.
- X-Panel icon has to be clicked on. Start Power On activates power supply of technician booth. Crestron Graphic Interface will be shown on PC-screen. (see figures 1,2)
- Change Room Combination button has to be clicked on. (Enter Password). (see figure 2)
- Separate Rooms button has to be activated. Audio signal distribution between conference rooms and setup of all CCU units involved is being changed to Single Mode. (see figure 3)
- RF-cabling between Master-Integrus unit (M1) and Slaved-Integrus units (BR-B) has to be disconnected. (see figure 4)
- The DCN-Network Cabling (Plastic Optic Fibre / POF) has to be reconnected to the Integrus Transmitters. (BR-B) The POF-Cable from POF/GOF Splitter to CCU has to be disconnected on CCU side to avoid malfunction (remote cable from NCO-Zentrale Technik).
- Integrus Transmitter Setup has to be reconfigured. Setup Item 4A Transmission has to be changed from *Slave* to *On* (BR-B) Setup Item 4B Network Mode has to be changed from *Disabled* to *Enabled* . (BR-B) The IAEA-Integrus Transmitter remains in GC-Setup.
- The Line Array combination has to be reconfigured to single mode via Speakon Patch Bay, pluggable in BR-B. (see figures 5,6)
- After reconfiguring all involved components to Single Mode, the technician booths can be switched off via Crestron Media Control. (see figure 7)

figure1:

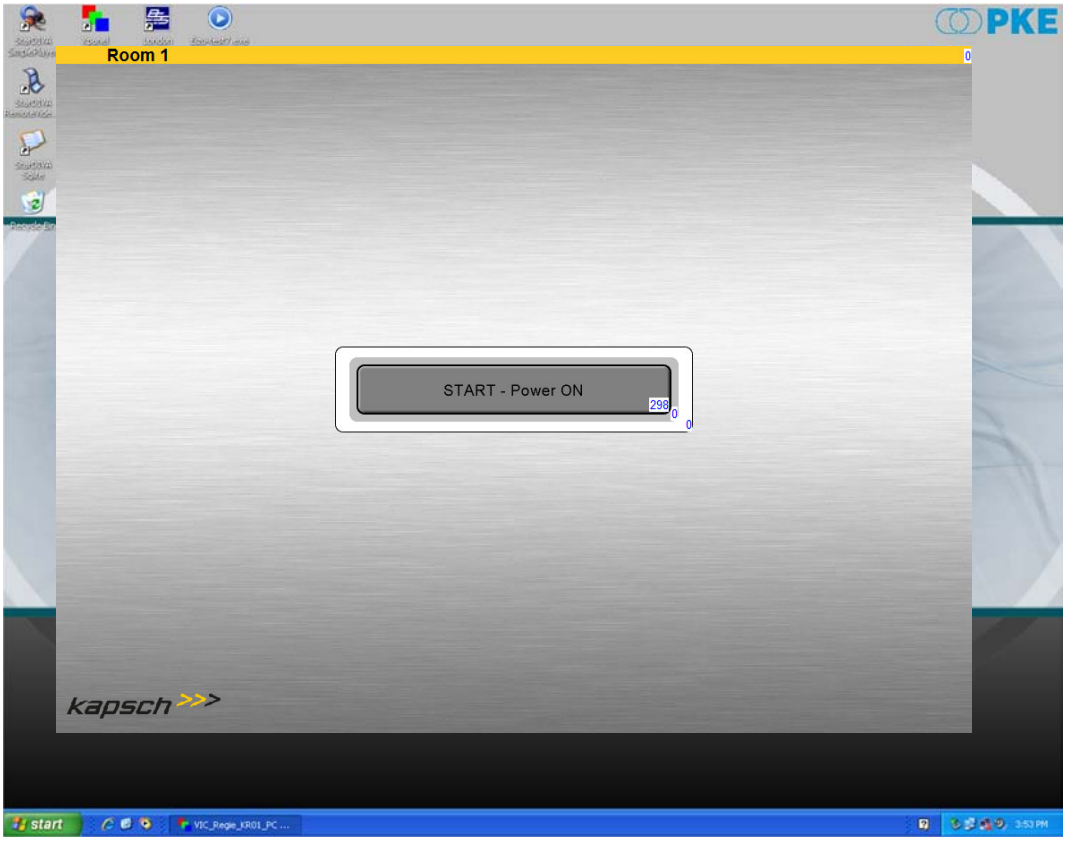

figure 2:

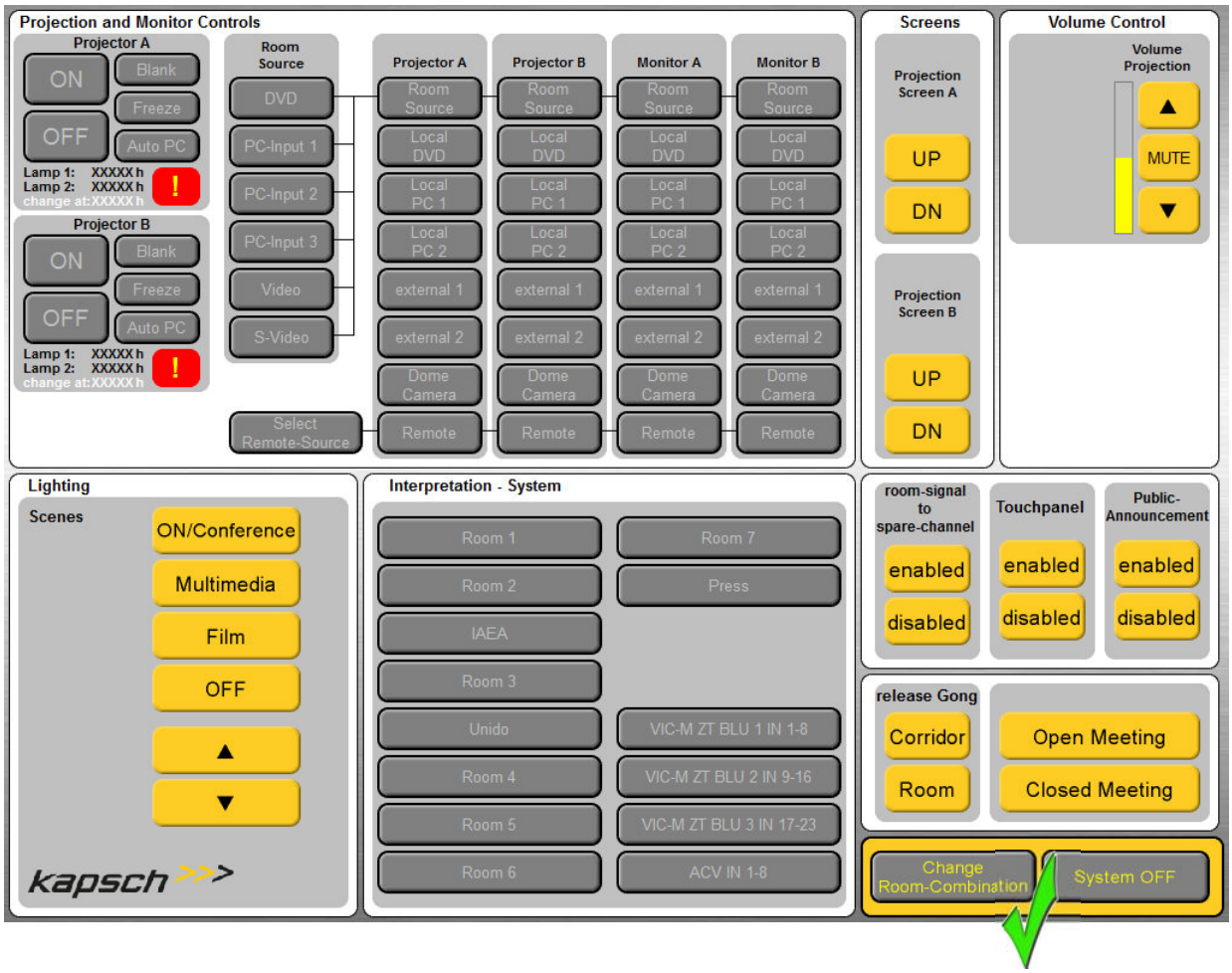

figure 3:

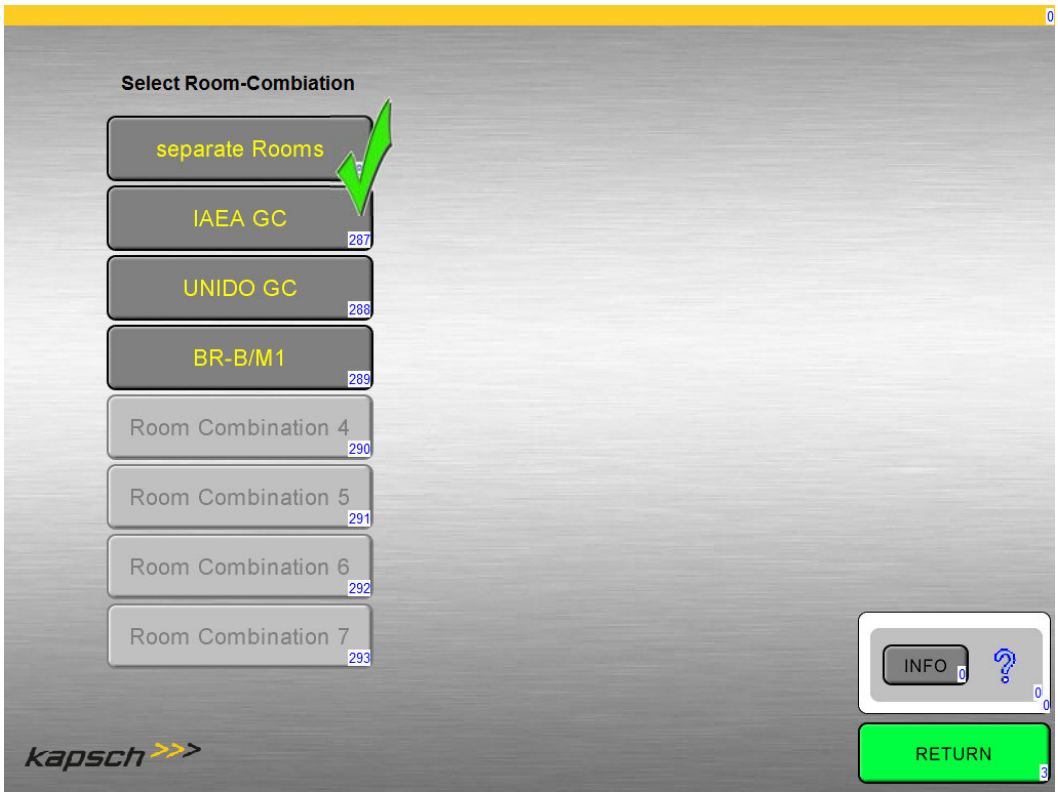

figure 4:

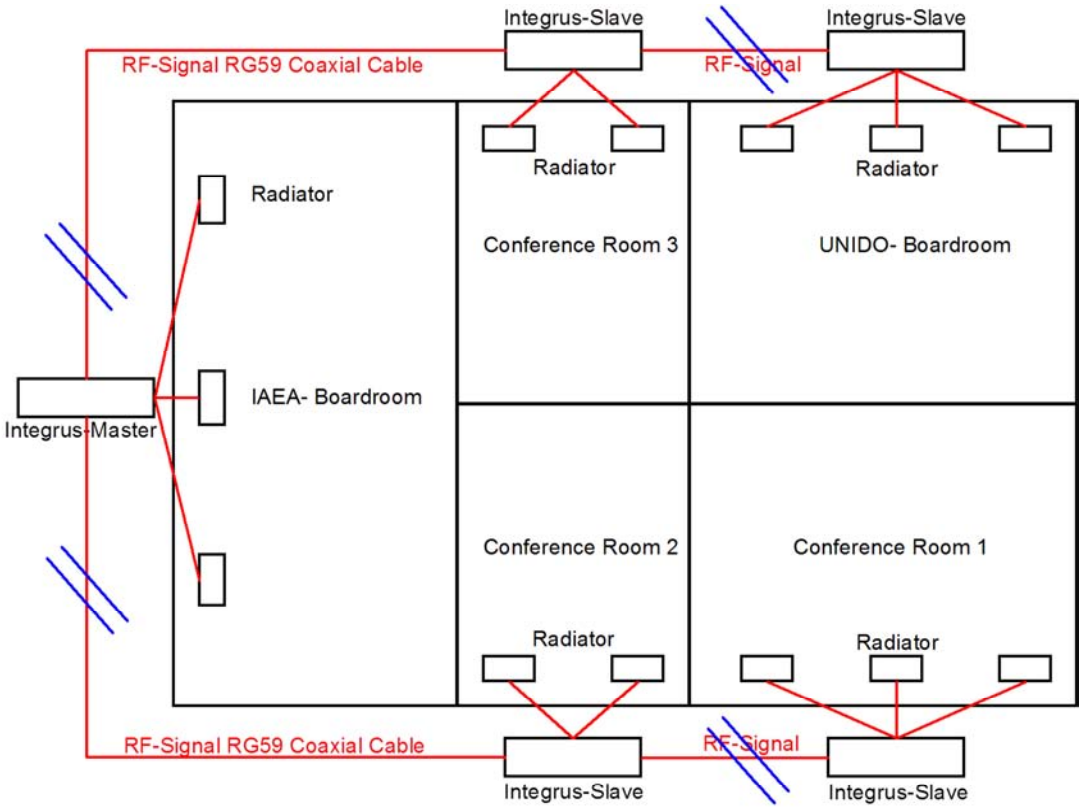

.....disconnect

figure 5:

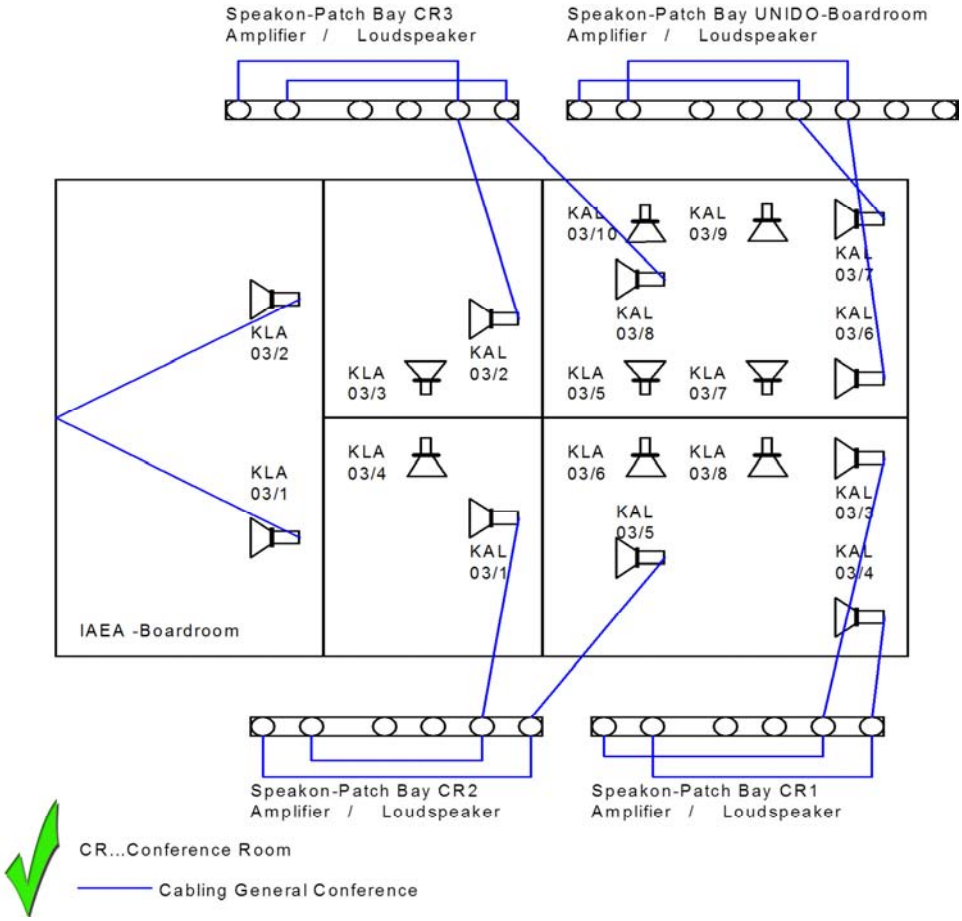

figure 6:

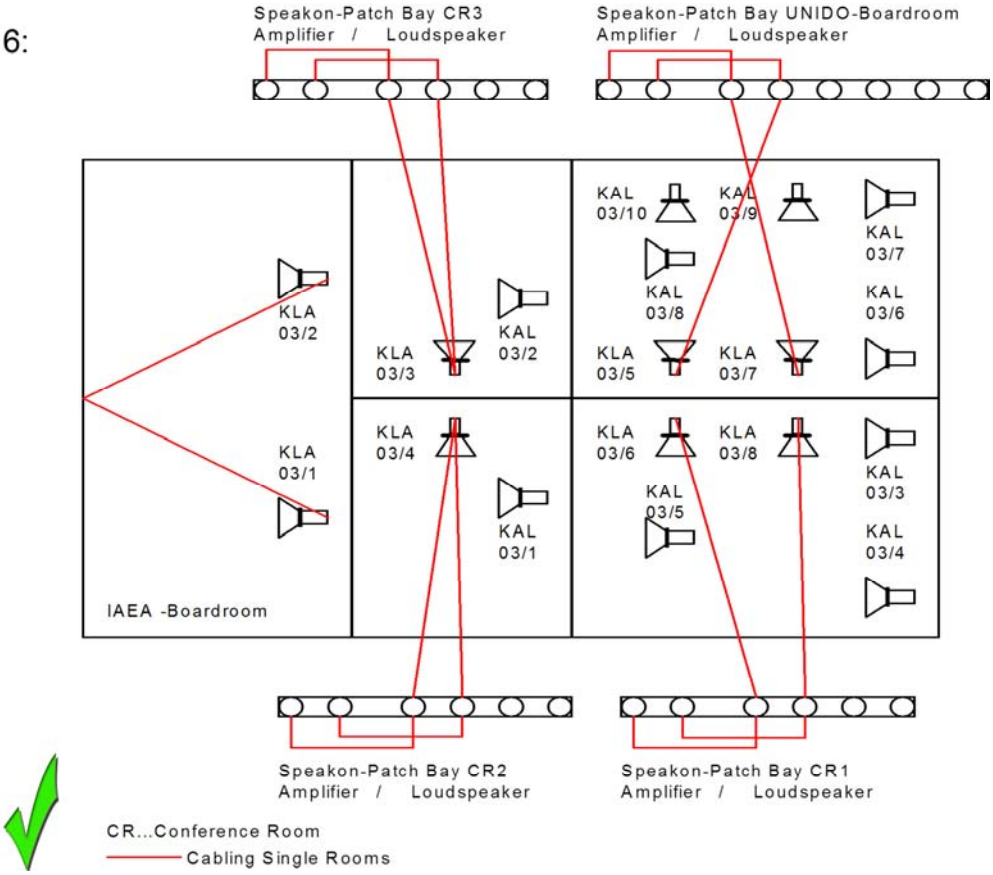

figure 7: